happybeds

Assembly Instructions

Harper - King

Important before assembly:

Read these instructions carefully before assembling or using the product.

Please check the contents of the boxes before attempting to assemble this product. The instructions will have a checklist of parts and fittings.

It would be sensible to lay a rug or a carpet on the floor where you intend to assemble the product, to avoid scratches and damaging the product or the floor.

Assemble the product as close to its intended final location/room as possible.

Do NOT use any power tools as this may damage the frame.

Health & Safety:

This product or some parts of this product will be heavy. Please use an assistant when lifting.

Please keep small parts out of reach of children.
Always use on a level, even surface.
DO NOT jump on the product or any of its parts.
DO NOT use this product if any parts are missing, damaged or worn.
DO NOT use this product unless all fixings are secured.

Please keep these instructions for future reference.

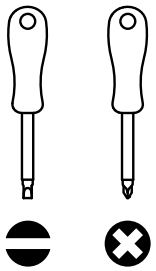

(Not metal)

These tools are not necessary, but may help to assemble certain parts of the product.

Do NOT use any power tools as this may damage the frame.

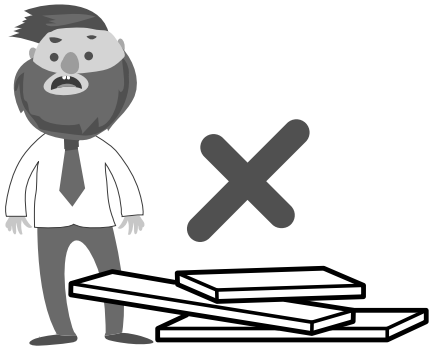

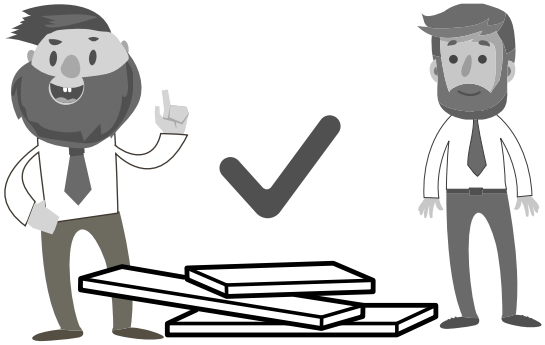

This product or some parts of this product will be heavy. Please use an assistant when lifting.

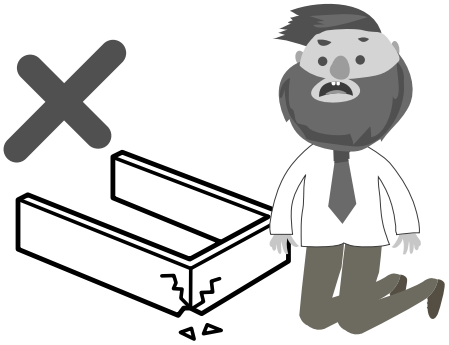

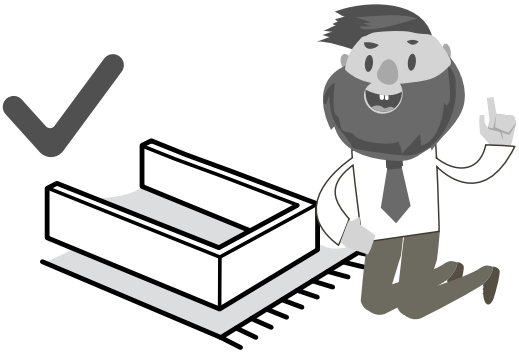

Never drag or push the pieces across a hard or stone floor as this will cause damage to the joints. Use a carpet or a rug for extra care.

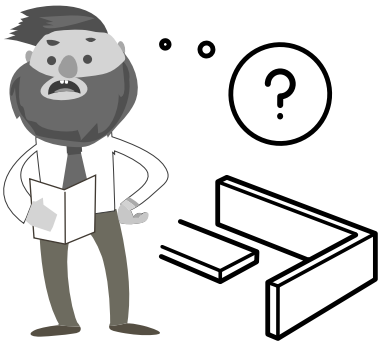

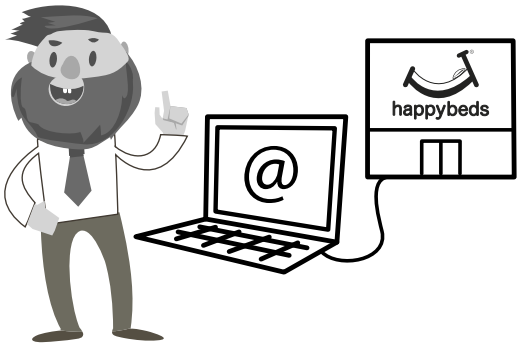

If you have problems assembling or have damaged or missing pieces, please contact us by visiting:
https://www.happybeds.co.uk/customer-service

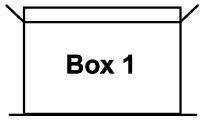

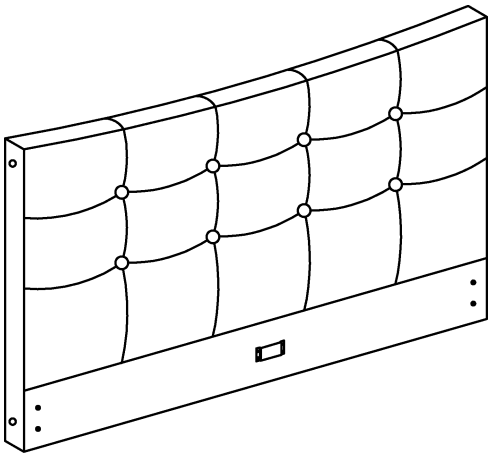

1.Headboard (x1)

8.Side Wing (x2)

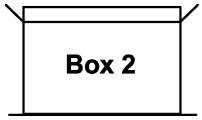

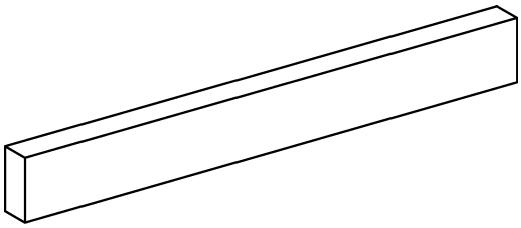

2.Footboard (x1)

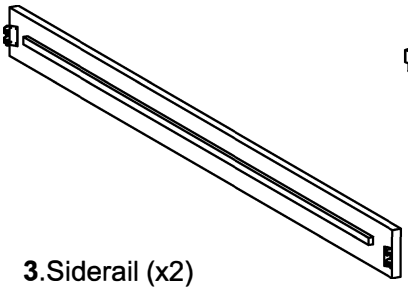

3.Siderail (x2)

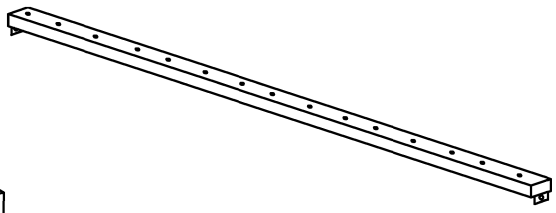

4.Centre Rail (x1)

5.Slats (x28)

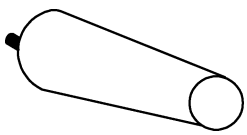

6.Legs (x4)

7.Support Legs (x2)

Hardware

All fitting are stored within Box 1

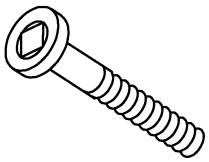

A.M6 x 40 mm JCBC (x2)

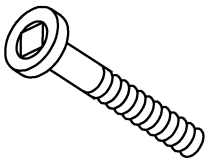

B.M6 x 60 mm JCBC (x4)

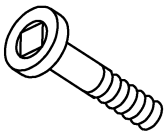

C.M8 x 20 mm JCBB (x8)

D.Allen Key M4 x 65 mm (x1)

E.Allen Key M5 x 70 mm (x1)

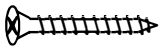

F.M4 x 25 mm CSK (x2)

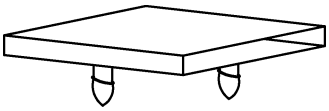

G.Double Slat Cap (x14)

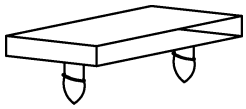

H.Single Slat Cap (x28)

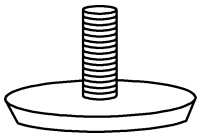

I.Adjuster (x2)

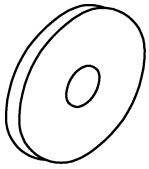

J.NO.35 Washers (x4)

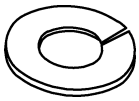

K.Spring Washer (x4)

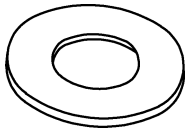

L.Flat Washer (x4)

***You will need a screwdriver (not provided)**

Step 1

Unpack all components from the boxes and check you are not missing anything.Please check these against the list on page 3 & 4.Should you identify any missing components,please contact the retailer you purchased the bed from.

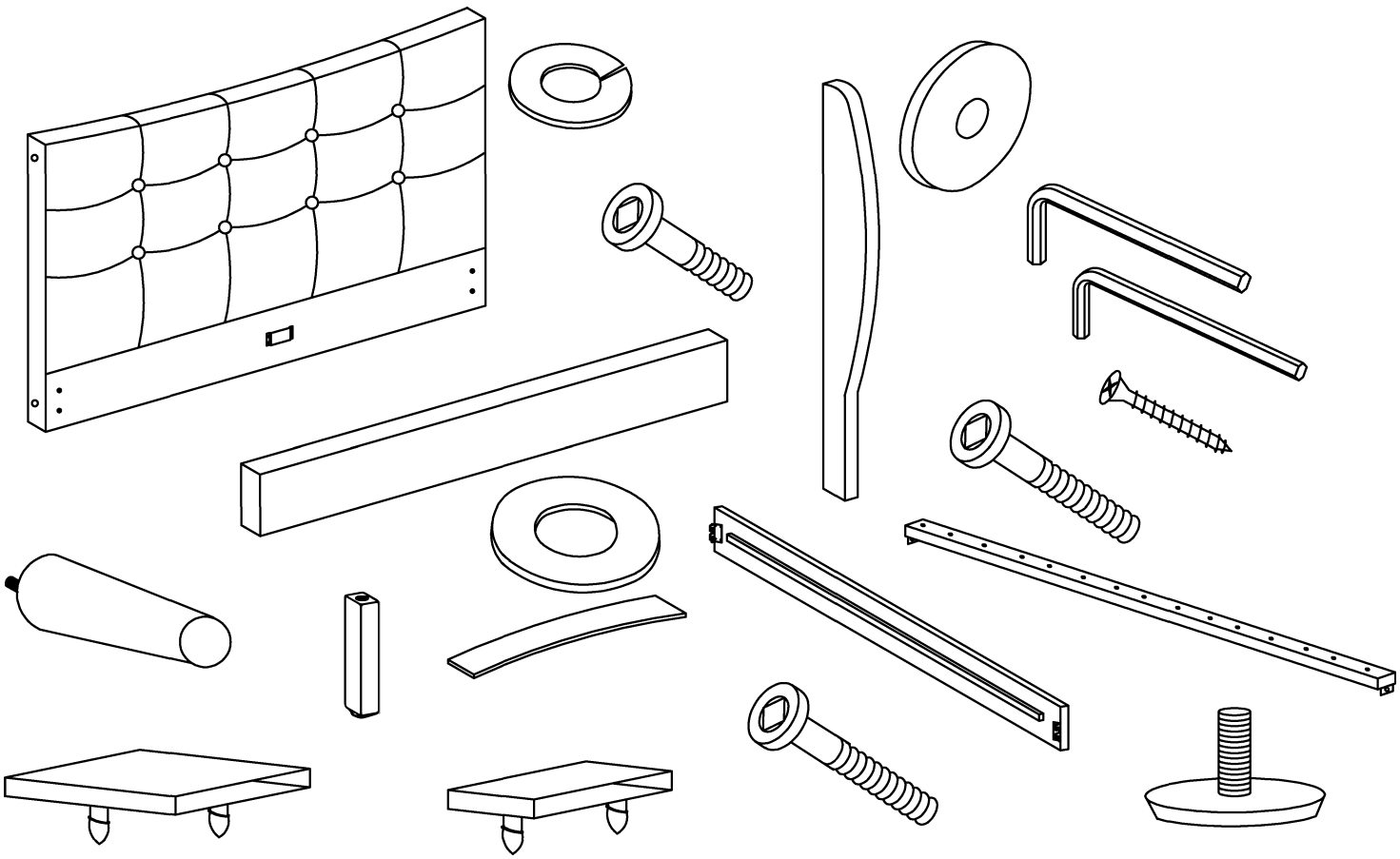

Step 2

Unzip the black non-woven fabric on the back of 1x Headboard (**1**) and take out the 2x Side Wing (**8**).

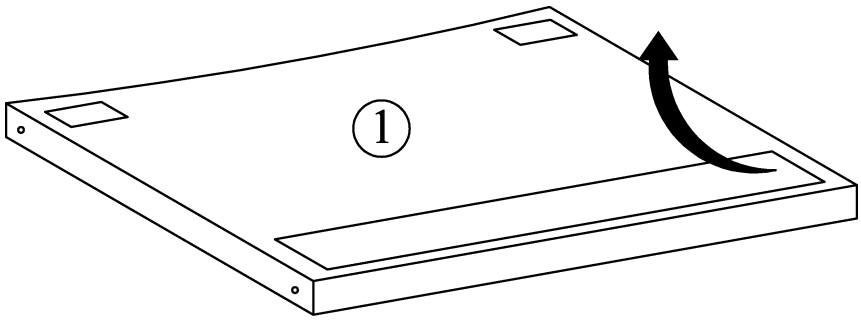

Back View !!

Step 3

Attach the 4x Legs (**6**) to the 1x Headboard (**1**) and 1x Fooboard (**2**).

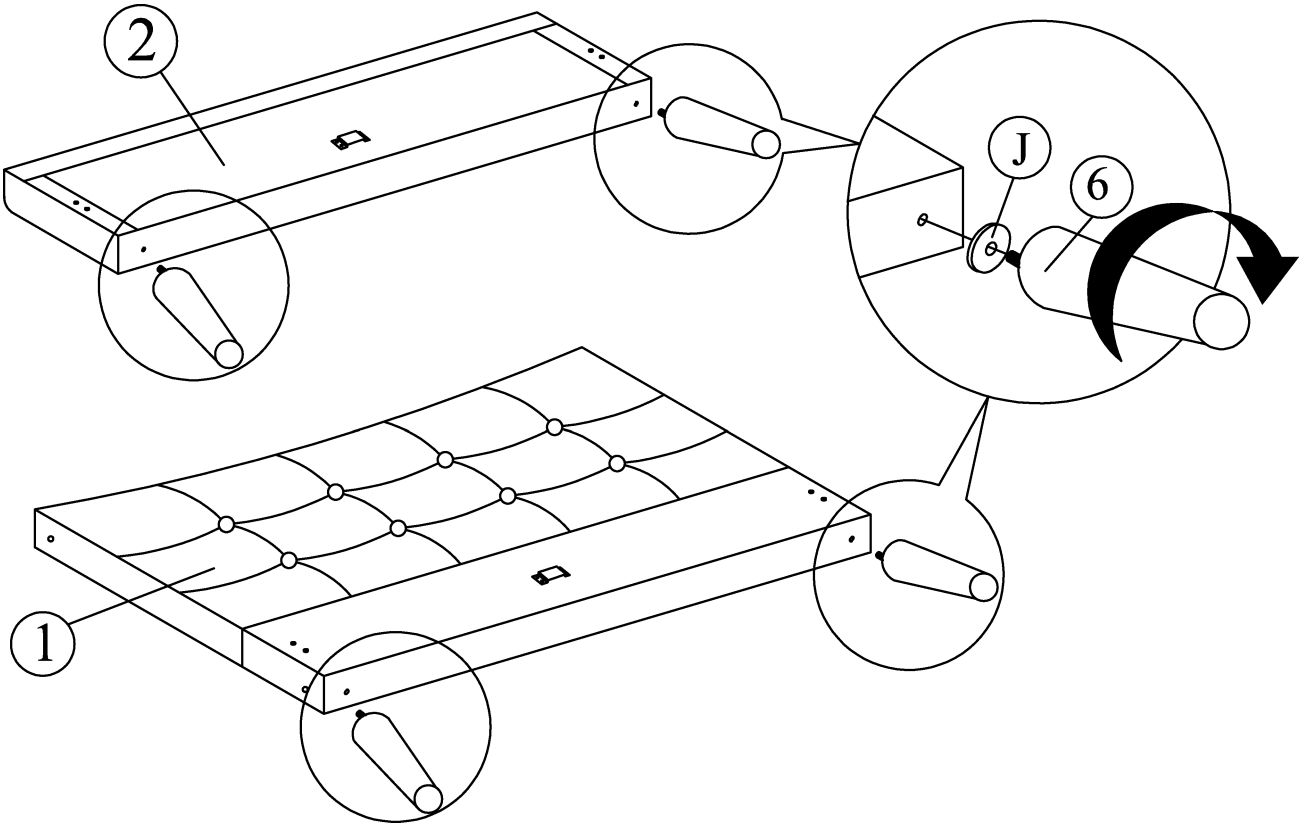

DO NOT use any power tools as this may damage the frame and will invalidate any claim.

Step 4

Tighten the Side Wing (**8**) to 1x Headboard (**1**) as shown.

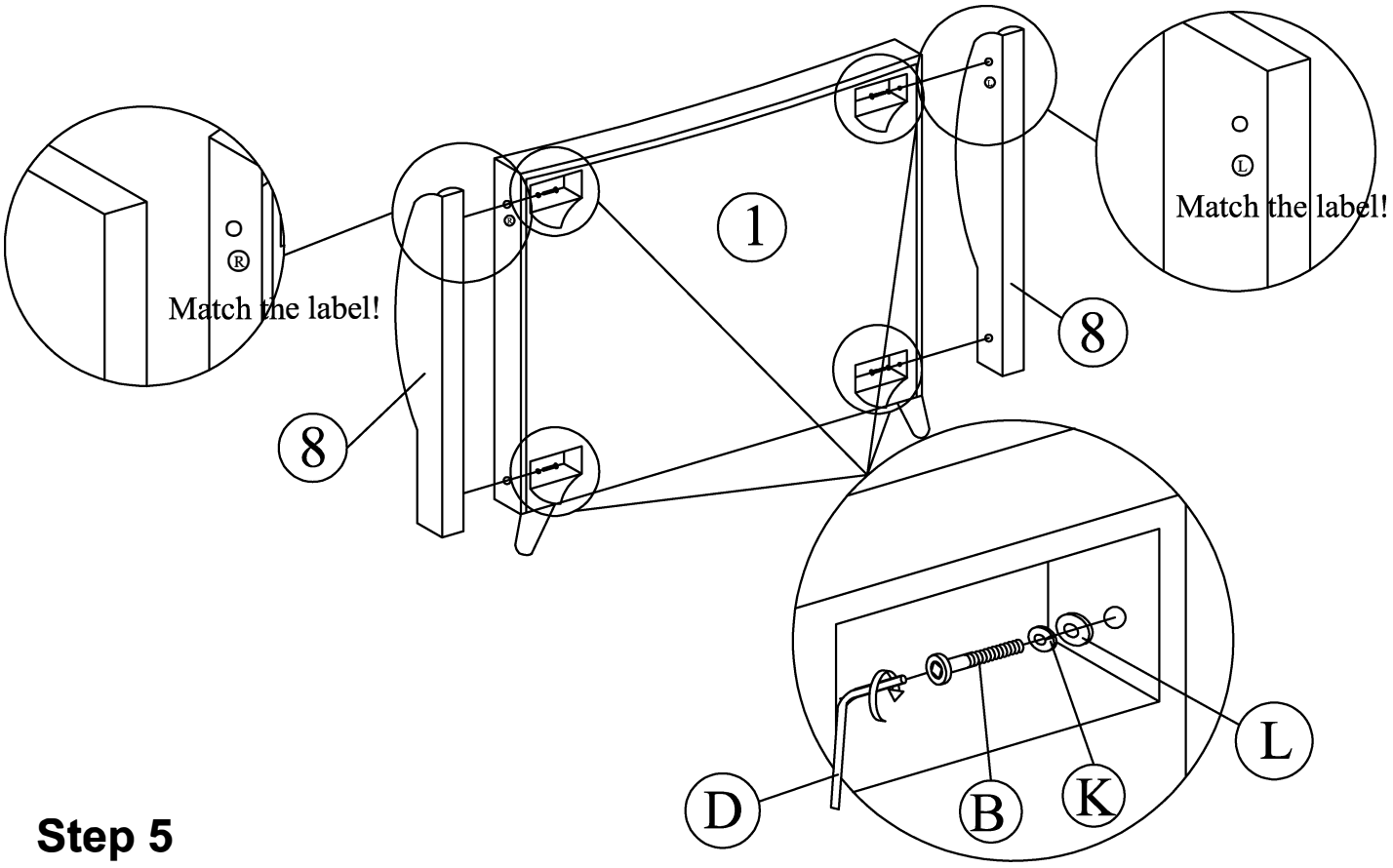

Step 5

Attach 2x Side Rail (**3**) to 1x Footboard (**2**) and 1x Headboard (**1**) by pushing the bracket down to fit it.

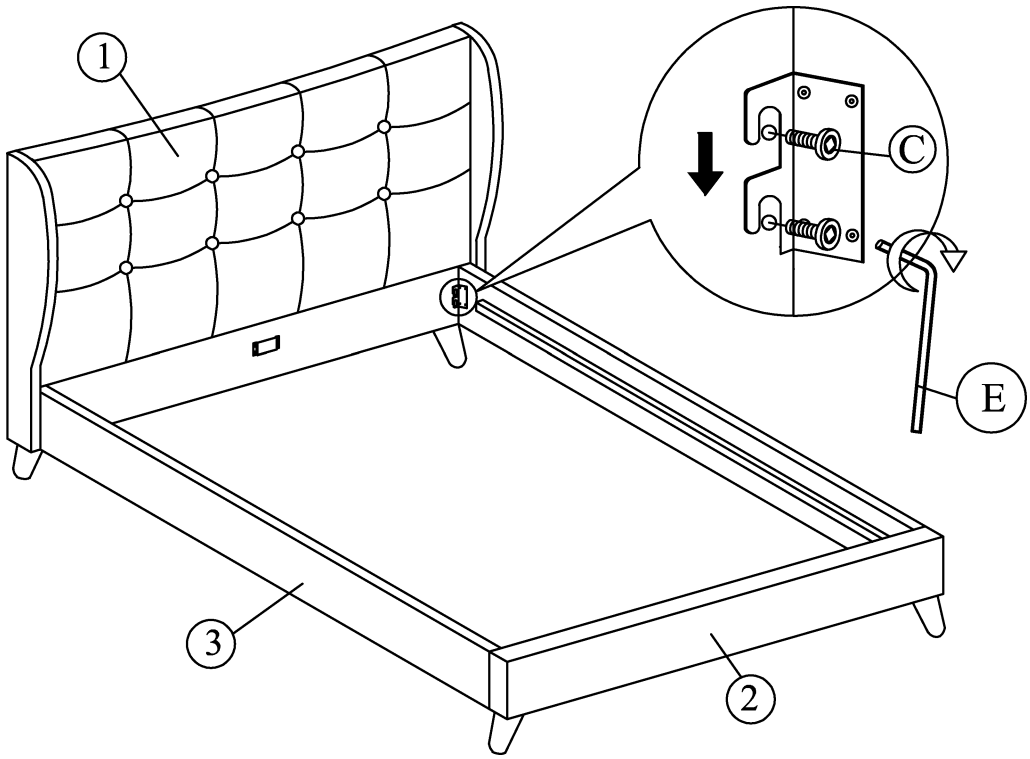

DO NOT use any power tools as this may damage the frame and will invalidate any claim.

Step 6

Attach the 2x support legs (**7**) to 1x centre rail (**4**) using 2x M6x40mm JCBC (**A**) and 1x M4 Allen Key (**D**). Then screw 2x Adjuster (**I**) to 2x support legs (**7**).

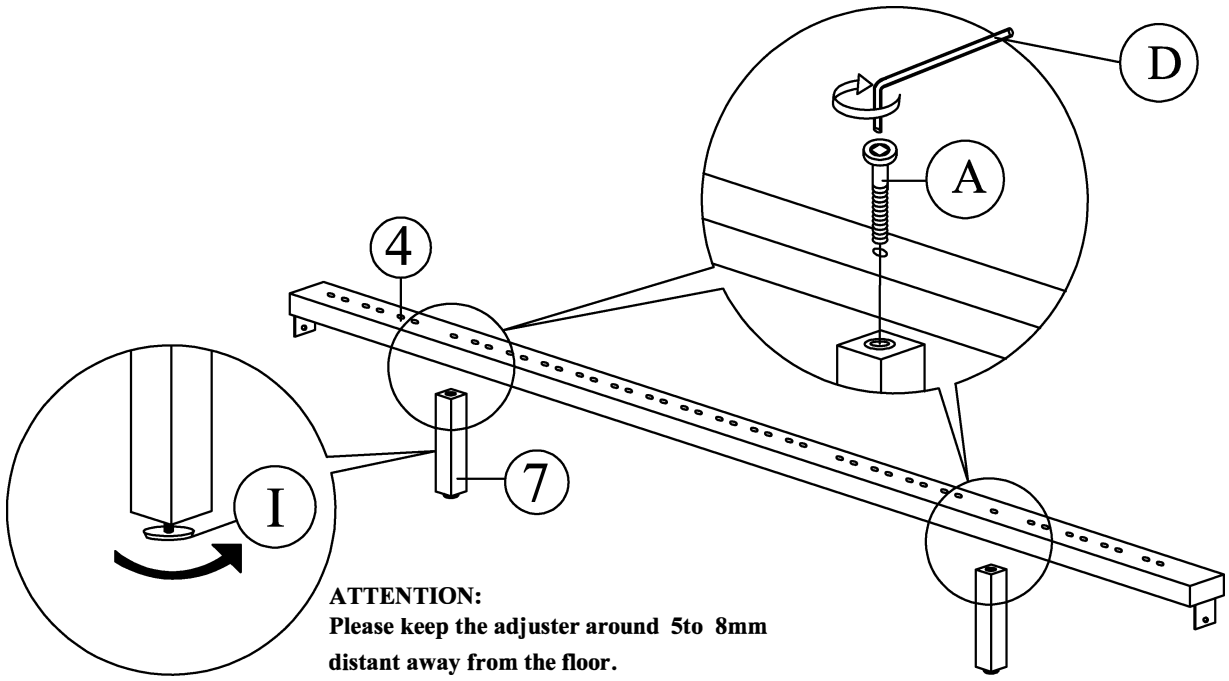

Step 7

Firstly, slot the 1x centre rail (**4**) to the bracket on 1x Headboard (**1**) and 1x Footboard (**2**). Then secure using 2x M4x25mm CSK (**F**) and Screwdriver (Not Provided).

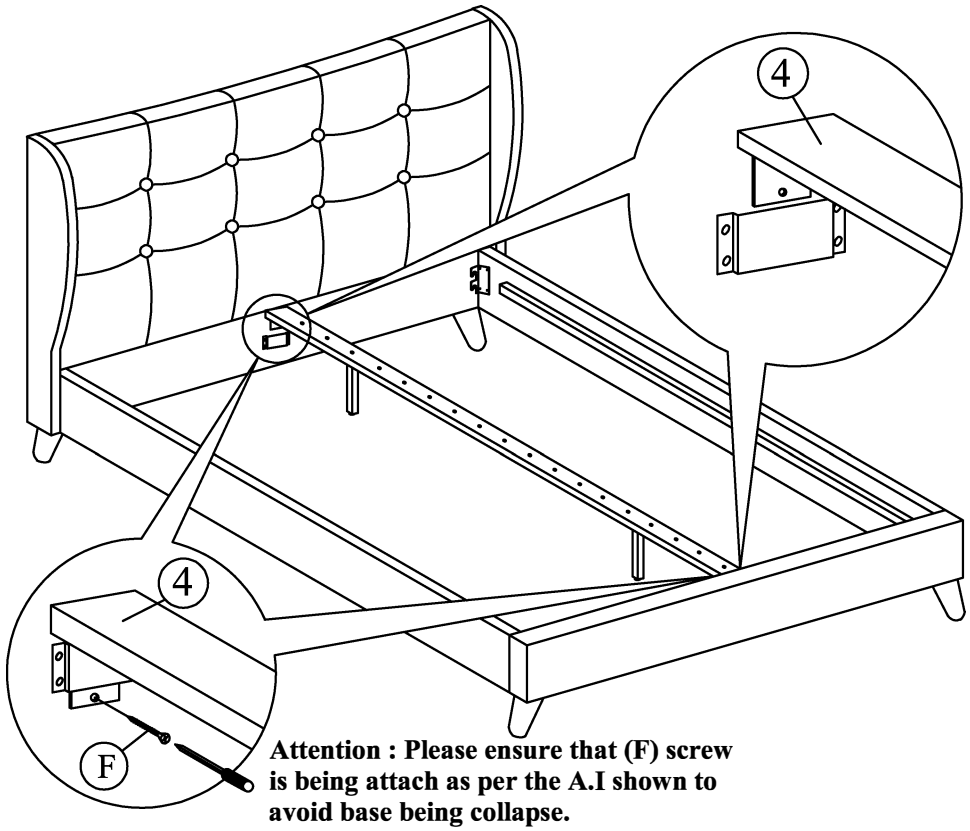

DO NOT use any power tools as this may damage the frame and will invalidate any claim.

Step 8

Slot the 28x slats (**5**) into the 14x Double slat caps (**G**) and then into 28x Single Slat caps (**H**). Press firmly into the holes located on the 2x side rails (**3**) and 1x centre rail (**4**).

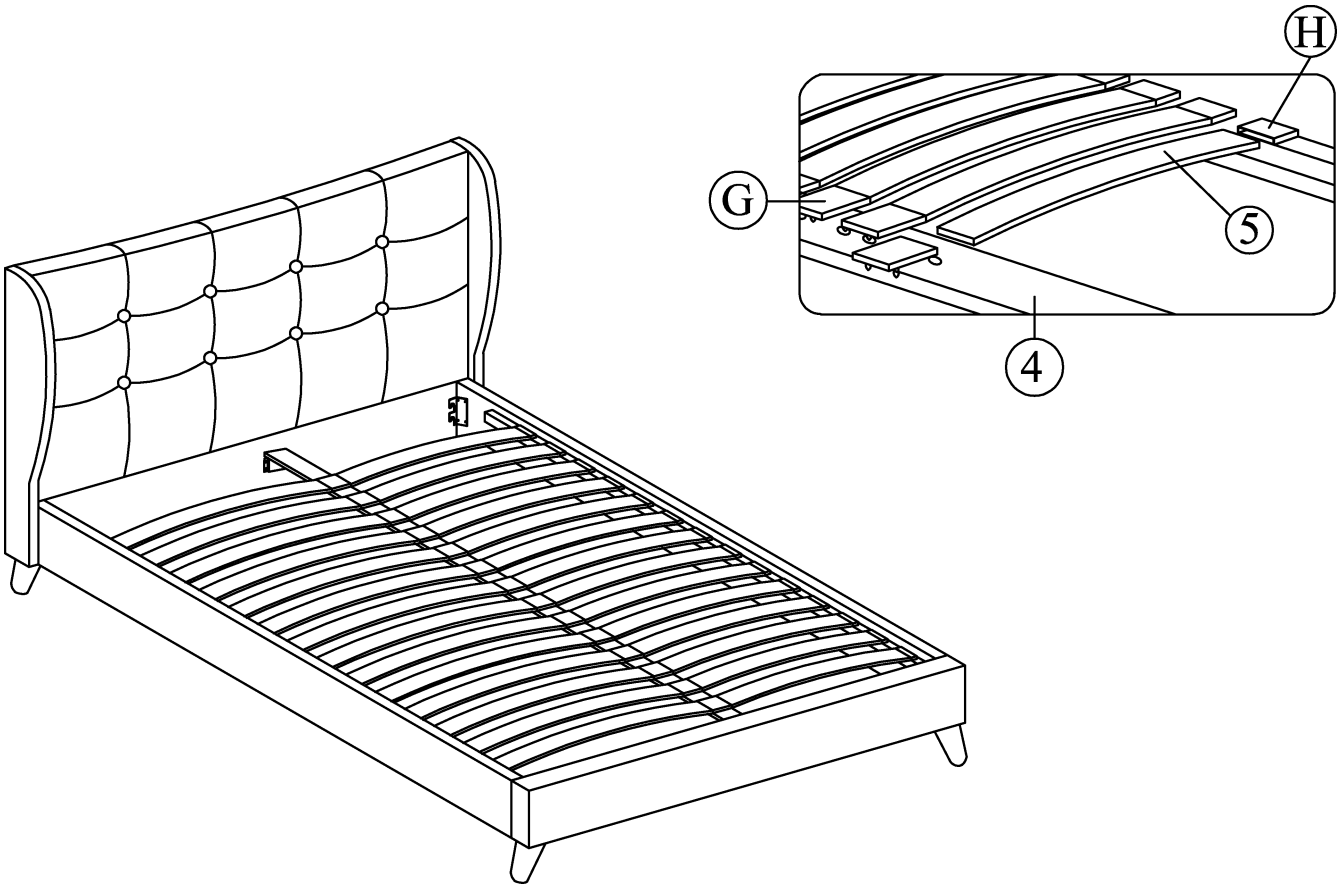

Please dispose of all packaging safely.

General Care & Maintenance

Wipe clean with a slightly damp cloth.
Avoid the use of all household cleaners and abrasives.

Periodically check all screw & fixings to ensure they are secure.
When moving your product, carefully lift into place. Never drag or push the product across the floor as this will cause damage to the joints. If the product is used on hard flooring, such as wood or laminated floor, you must place some protection under the legs to stop the product from moving. If this is not adhered to, it could result in failure to the product that will invalidate the warranty.

For more information on cleaning and product care visit:
https://www.happybeds.co.uk/help-and-advice

Notes

We've tried to make this product as easy to assemble as possible. In the unlikely event that you have problems putting it together or have damaged or missing pieces, please contact us by visiting:
https://www.happybeds.co.uk/customer-service