happybeds

Assembly Instructions

Brompton Fabric Bed 4ft6

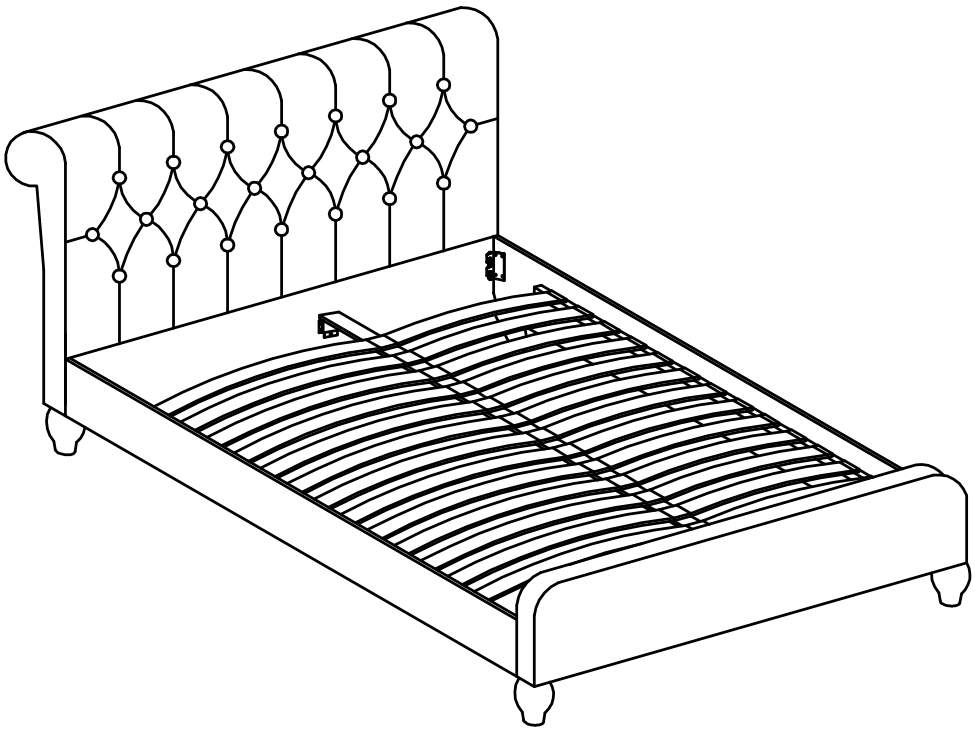

Important before assembly:

Read these instructions carefully before assembling or using the product.

Please check the contents of the boxes before attempting to assemble this product. The instructions will have a checklist of parts and fittings.

It would be sensible to lay a rug or a carpet on the floor where you intend to assemble the product, to void scratches and damaging the product or the floor.

Assemble the product as close to its intended final location/room as possible.

Do NOT use any power tools as this may damage the frame.

Health & Safety:

This product or some parts of this product will be heavy. Please use an assistant when lifting.
DO NOT jump on the product or any of its parts.
DO NOT use this product if any parts are missing, damaged or worn.
DO NOT use this product unless all fixings are secured.
Please keep small parts out of reach of children.
Always use on a level, even surface.

Please keep these instructions for future reference.

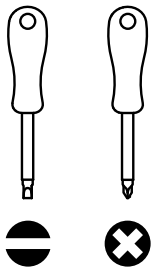

(Not metal)

These tools are not necessary, but may help to assemble certain parts of the product.

Do NOT use any power tools as this may damage the frame.

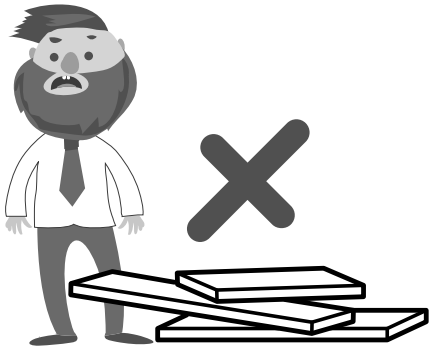

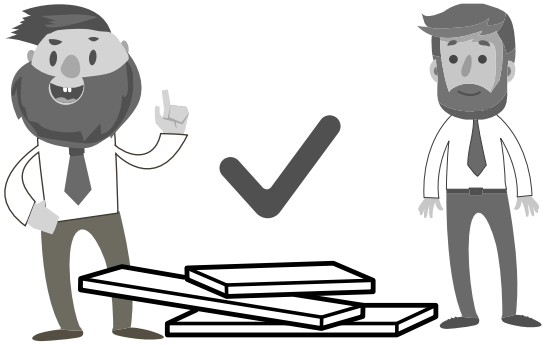

This product or some parts of this product will be heavy. Please use an assistant when lifting.

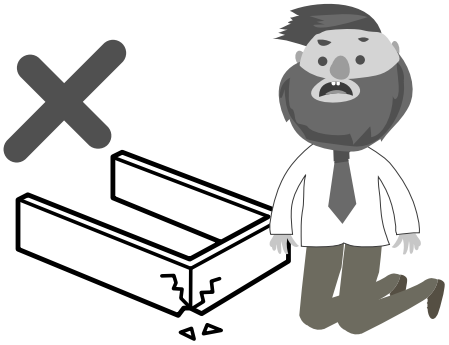

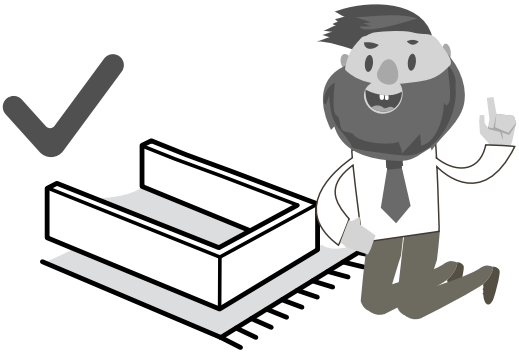

Never drag or push the pieces across a hard or stone floor as this will cause damage to the joints. Use a carpet or a rug for extra care.

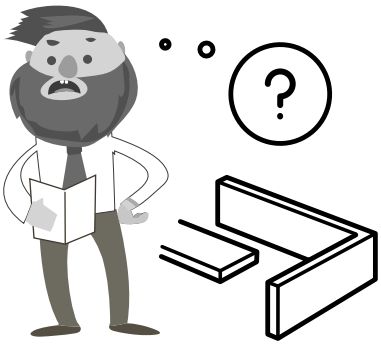

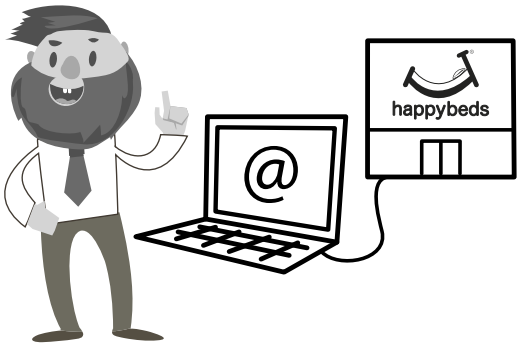

If you have problems assembling or have damaged or missing pieces, please contact us by visiting:
https://www.happybeds.co.uk/customer-service

Vendor: S000013

Parts List

Parts	Description	Box	Qty
1	Headend 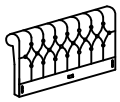	1	1
2	Footend	2	1
3	Side Rail 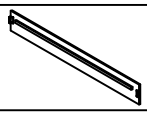	3	2
4	Legs	2	4
5	Slat	2	26
6	Centre Rail 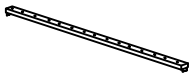	3	1
7	Support Leg	2	2

Hardware List (Found in box 2)

Parts	Description	Box	Qty
A	M6 x 40 mm JCBC 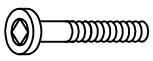	2	2
B	Allen Key M4 x 65 mm 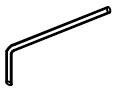	2	1
C	Allen Key M5 x 70 mm 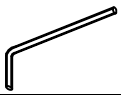	2	1
D	M4 x 25 mm CSK	2	2
E	Double Slat Cap	2	13
F	Single Slat Cap	2	26

***You will need a screwdriver (not provided)**

Vendor: S000013

Step 1: Attach the legs (4) to the headend (1) and footend (2).

DO NOT use any power tools as this may damage the frame and will invalidate any claim.

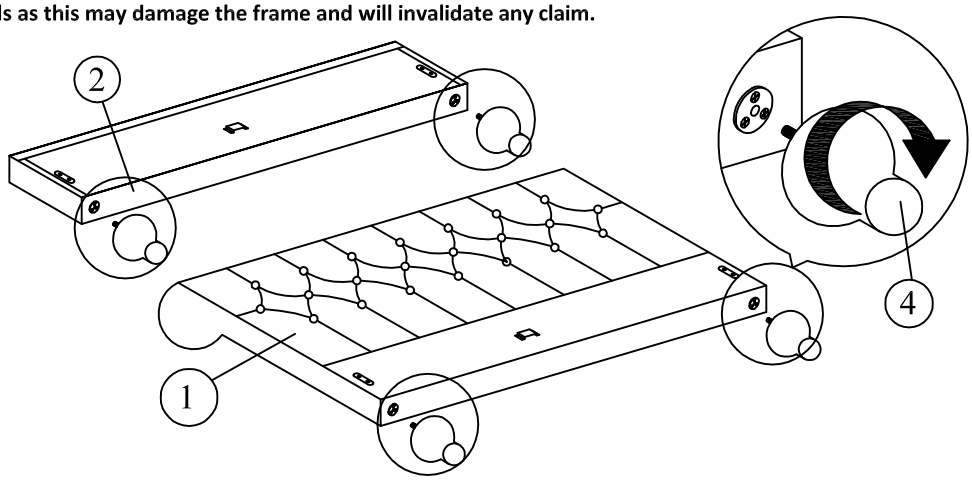

Step 2: Attach the side rails (3) by pushing the brackets down into place as shown.

DO NOT use any power tools as this may damage the frame and will invalidate any claim.

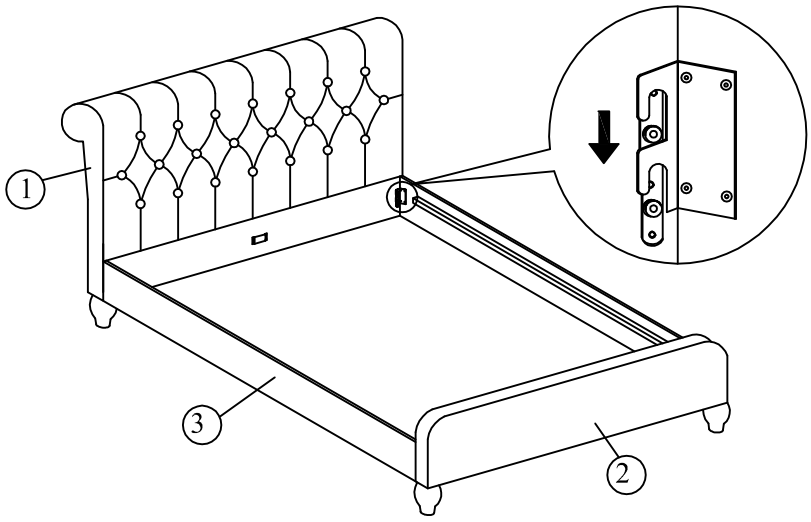

Step 3: Attach the support legs (7) to the centre rail (6) using hardware parts A and B.

DO NOT use any power tools as this may damage the frame and will invalidate any claim.

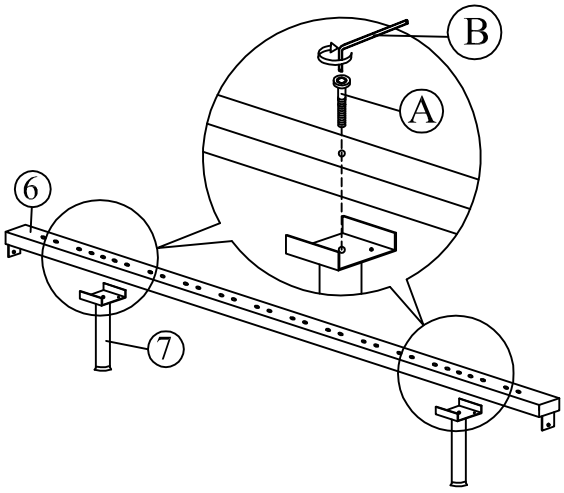

Vendor: S000013

Step 4: Insert the centre rail (6) to the headboard (1) and footboard (2) and secure using hardware part D and a screwdriver (not provided).

DO NOT use any power tools as this may damage the frame and will invalidate any claim.

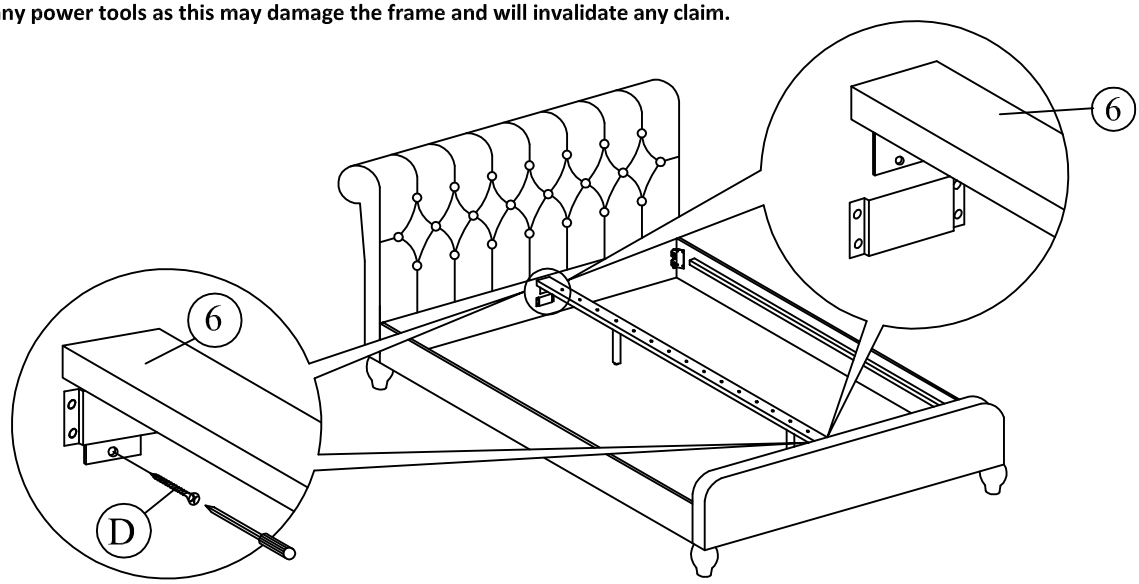

Step 5: Attach the slats (5) using hardware parts E and F then secure the bolts using hardware part C.

DO NOT use any power tools as this may damage the frame and will invalidate any claim.

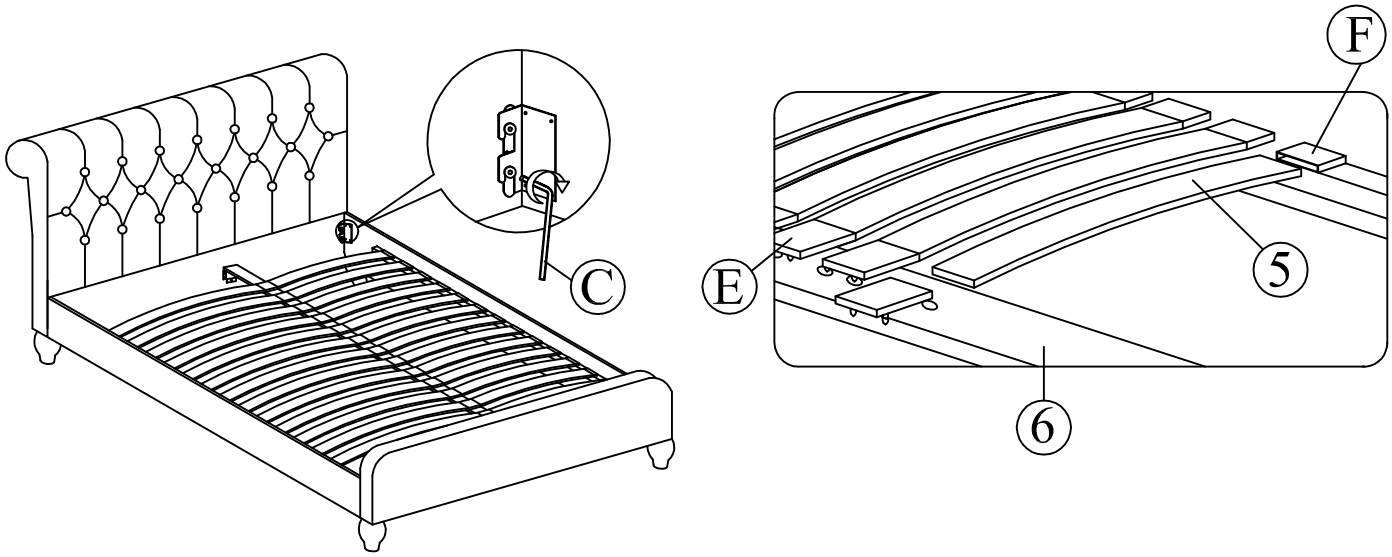

Please dispose of all packaging safely.

General Care & Maintenance

Wipe clean with a slightly damp cloth.
Avoid the use of all household cleaners and abrasives.

Periodically check all screw & fixings to ensure they are secure.
When moving your product, carefully lift into place. Never drag or push the pieces across the floor as this will cause damage to the joints and could result in failure to the product that will invalidate the warranty.

For more information on cleaning and product care visit:
https://www.happybeds.co.uk/help-and-advice

Notes

We've tried to make this product as easy to assemble as possible. In the unlikely event that you have problems putting it together or have damaged or missing pieces, please contact us by visiting:
https://www.happybeds.co.uk/customer-service

www.happybeds.co.uk

happybeds®