Floyd Metal Bed - 4FT6 Double



Assembly Instructions

Important before assembly:

Read these instructions carefully before assembling or using the product.

Please check the contents of the boxes before attempting to assemble this product. The instructions will have a checklist of parts and fittings.

Assemble the product as close to its intended final location/room as possible.

Health & Safety:

This product or some parts of this product will be heavy. Please use an assistant when lifting.

Please keep small parts out of reach of children.
Always use on a level, even surface.
DO NOT jump on the product or any of its parts.
DO NOT use this product if any parts are missing, damaged or worn.
DO NOT use this product unless all fixings are secured.

Further instructions are on the following pages.
Please keep these instructions for future reference.

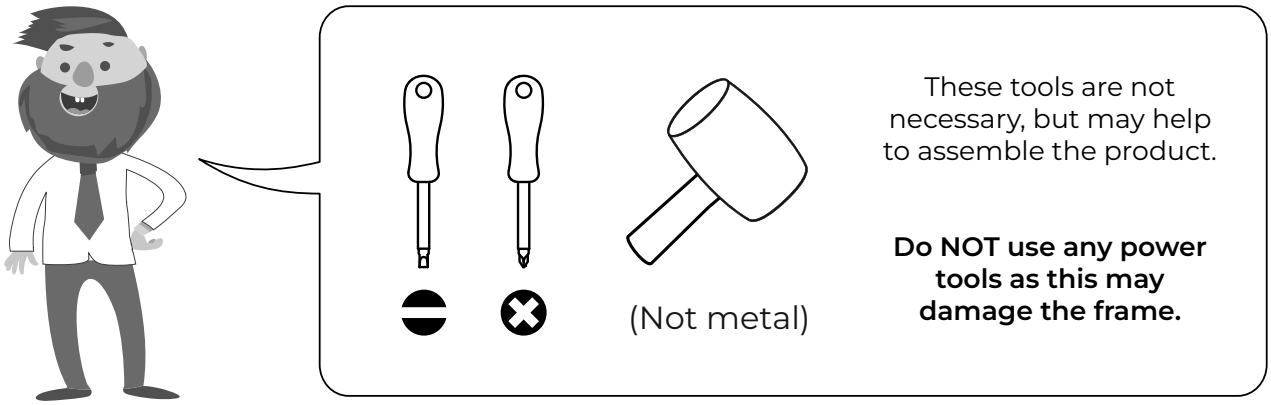

These tools are not necessary, but may help to assemble the product.

Do NOT use any power tools as this may damage the frame.



This product or some parts of this product will be heavy. Please use an assistant when lifting.

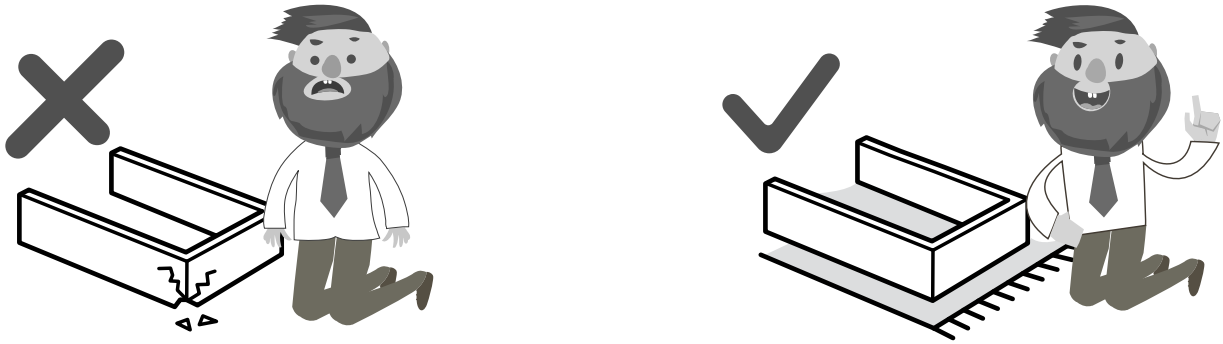

Never drag or push the pieces across a hard or stone floor as this will cause damage to the joints. Use a carpet or a rug for extra care.



If you have problems assembling or have damaged or missing pieces, please contact our customer services (details at the back of these instructions)

ASSEMBLY INSTRUCTIONS

METAL SPINDLE BED 135CM

Approximate Assembly Time	People Required to Assemble	
0.5hr		NO EXTRA TOOLS REQUIRED

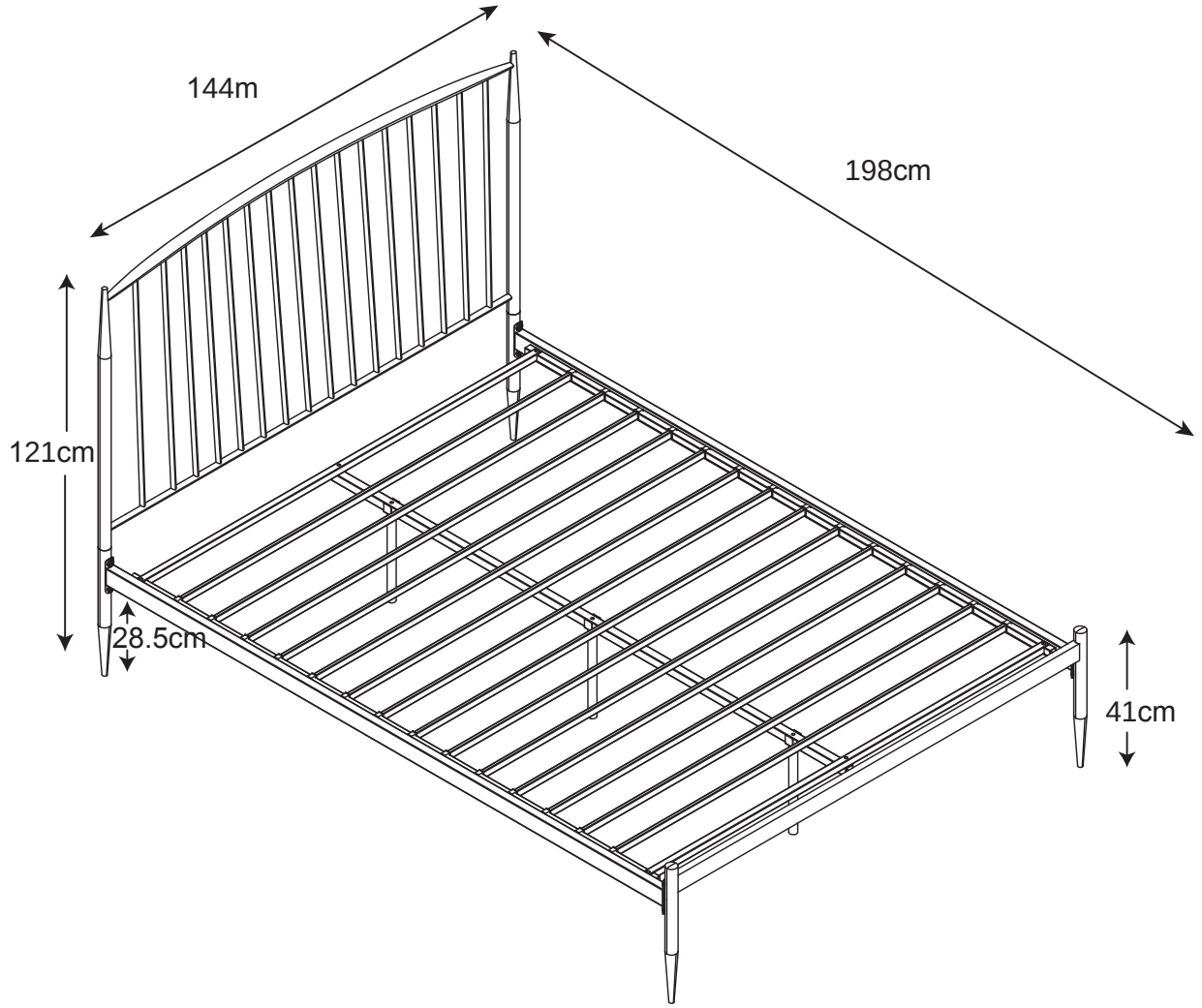

Before you start...

Please carefully unpack and lay out all of the component parts to ensure nothing is missing and to check each component for any obvious damage.

Should you identify any concerns at this stage please contact the retailer from whom this product was purchased. Please quote your order number, details of your issue, the product code, and the batch number from the cartons which will help to resolve your issue as quickly as possible.

Version Number-1.1 **Product Code - FLO001**

Please check all hardware matches the list below. Should you notice any are missing please contact your retailer.

A

M8×20mm

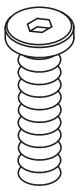

8x

B

M6×30mm

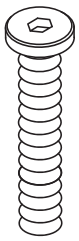

9x

C

M6×15mm

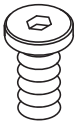

4x

D

M6

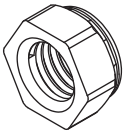

4x

E

S10mm

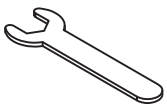

1x

E-1

S4mm

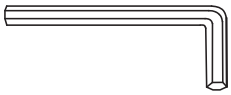

1x

F



1x

We strongly advise that you do not use Power Tools, such as drills or electric screwdrivers during the assembly as this may cause irreparable damage and will invalidate your warranty.

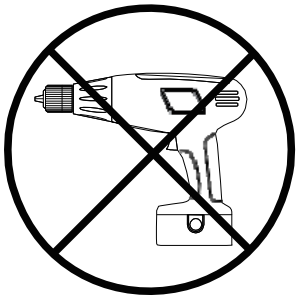

PARTS

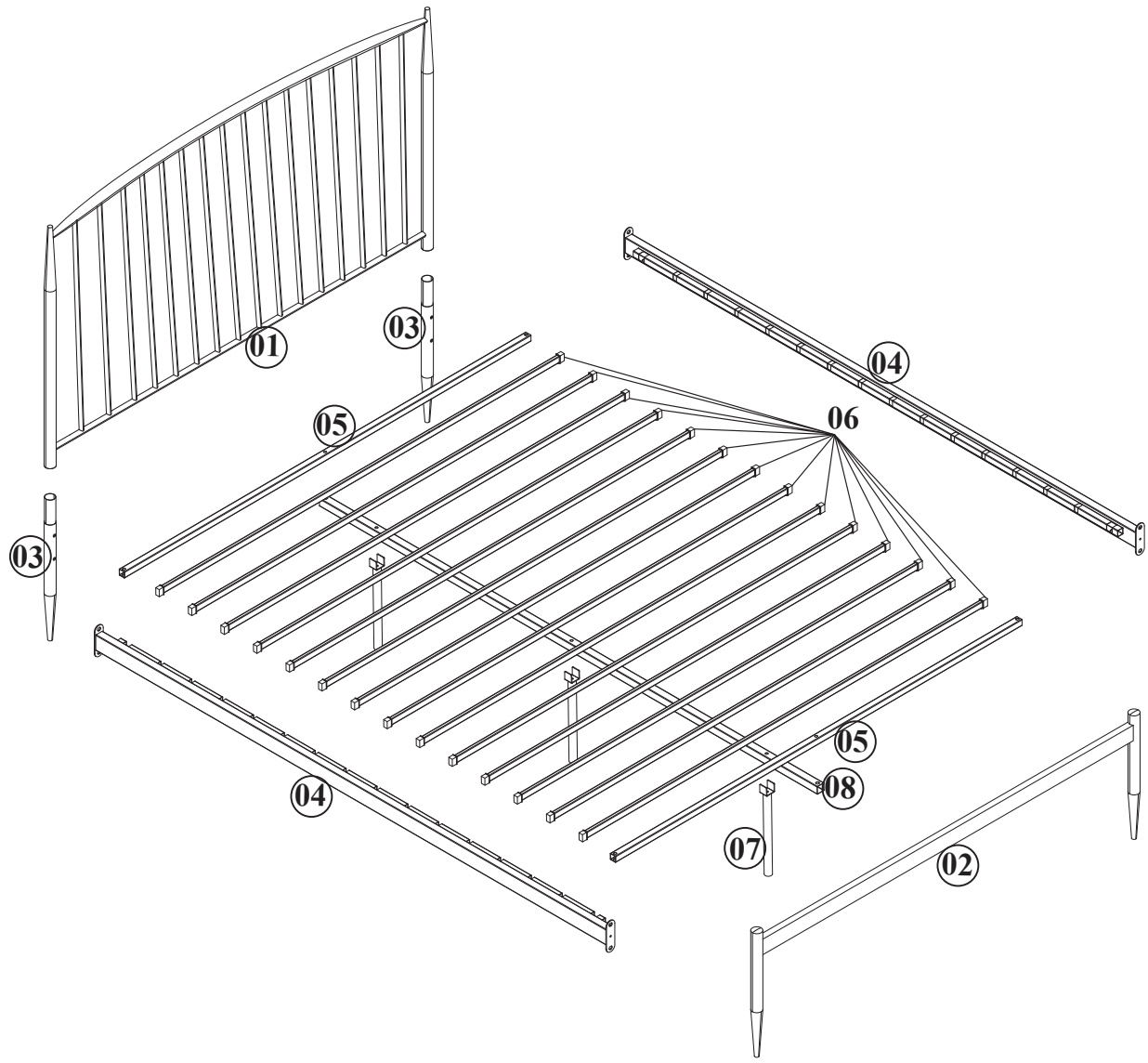

Please ensure you carefully check all the pieces, should you have any concerns please contact the retailer before assembly commences. Please have your order number, details of the issue, the product code, and the batch number from the cartons as this will help us to resolve your issue much faster.

ASSEMBLY ADVICE

Please take the time to carefully read through these instructions before you commence.

Keep these instructions for future reference.

We advise that the product is assembled in the room it is intended for.

We advise that you keep the hardware in a bowl during assembly to avoid losing anything.

We strongly recommend that you keep children away from the work area.

Small component parts could choke a child if swallowed.

We recommend you use a sheet or blanket to protect both floor and product through the assembly stages.

This product is heavy, and we recommend a 2 person lift to avoid personal injury or damage to theproduct.

Never push or pull the product as this could cause both personal injury or irreparable damage to product or floor.

We have tried to make this piece of furniture easy to assemble if the instructions are followed carefully.

In the unlikely event that you have problems with assembling the product or have missing or damaged parts, please contact your retailer and we will assist them in rectifying the problem as quickly as possible.

Please remember we strongly urge you DO NOT use power tools such as drill or electric screwdrivers as this could cause irreparable damage to your product and will invalidate your warranty.

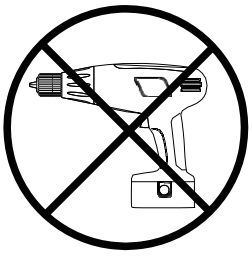

1

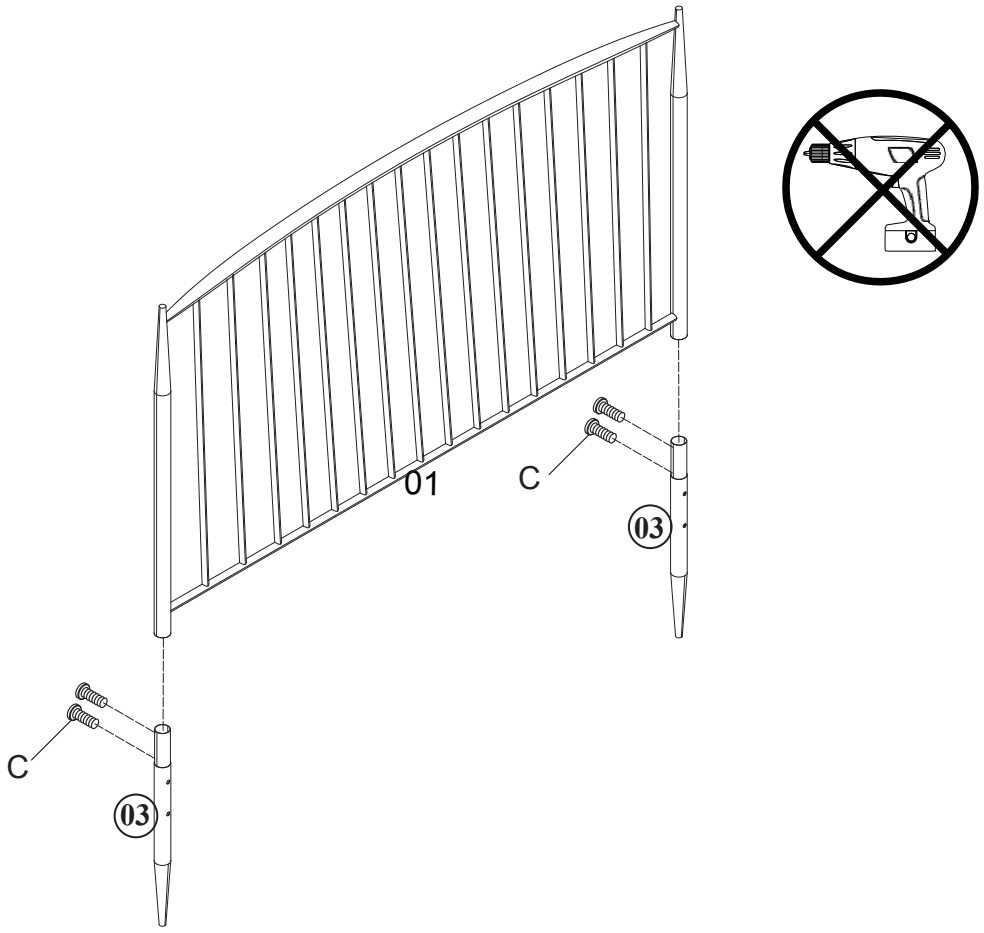

2

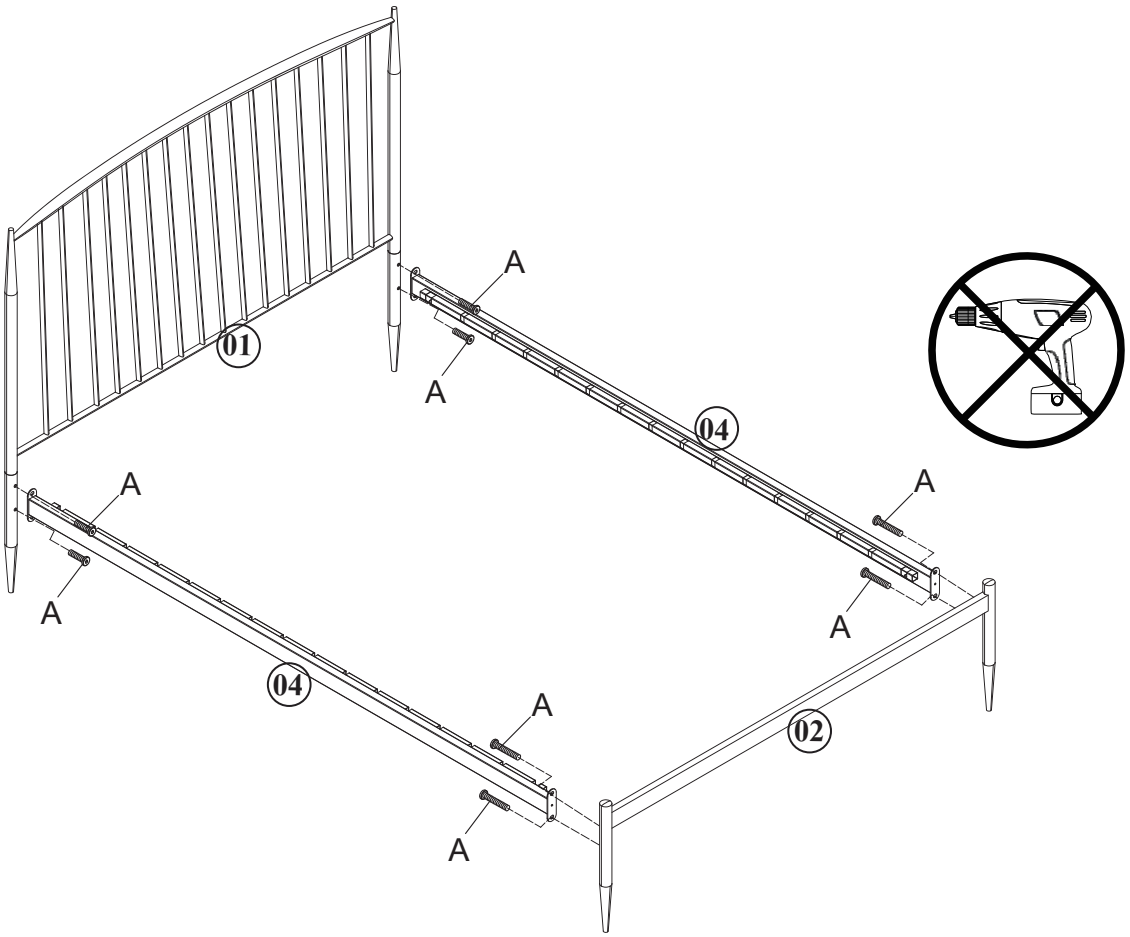

3

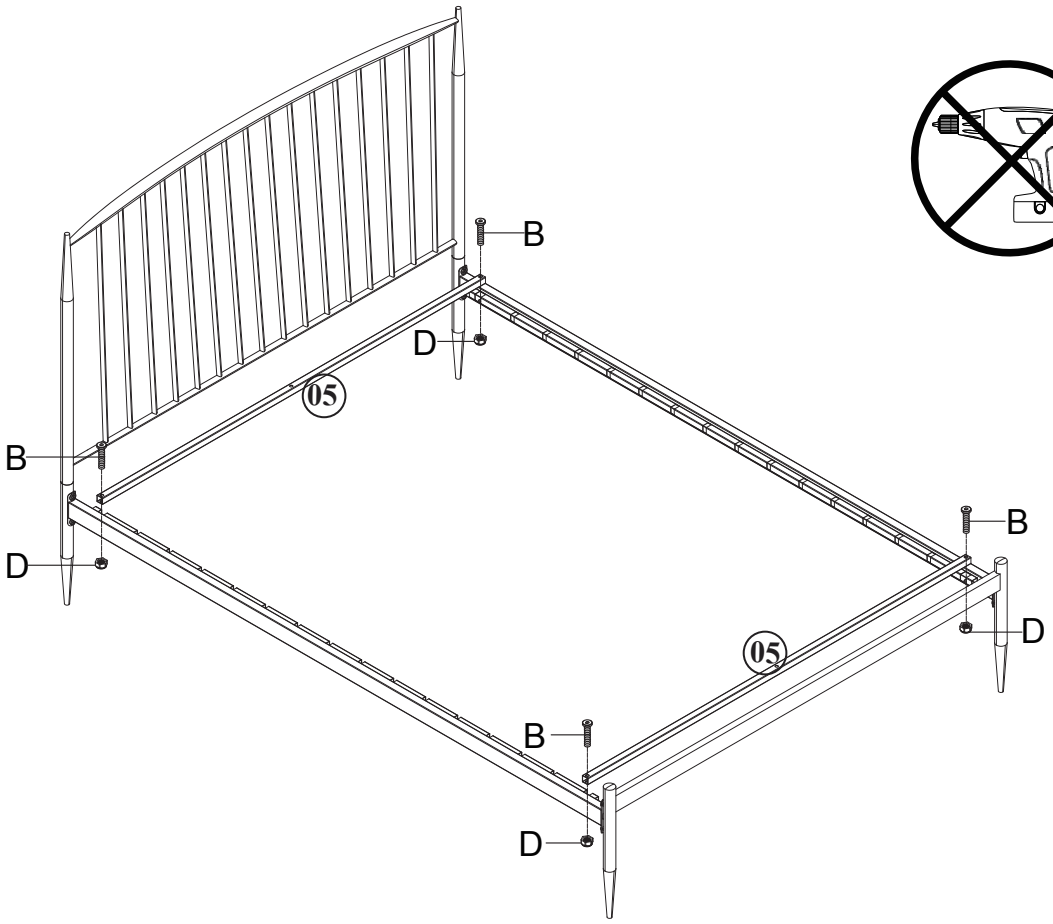

4

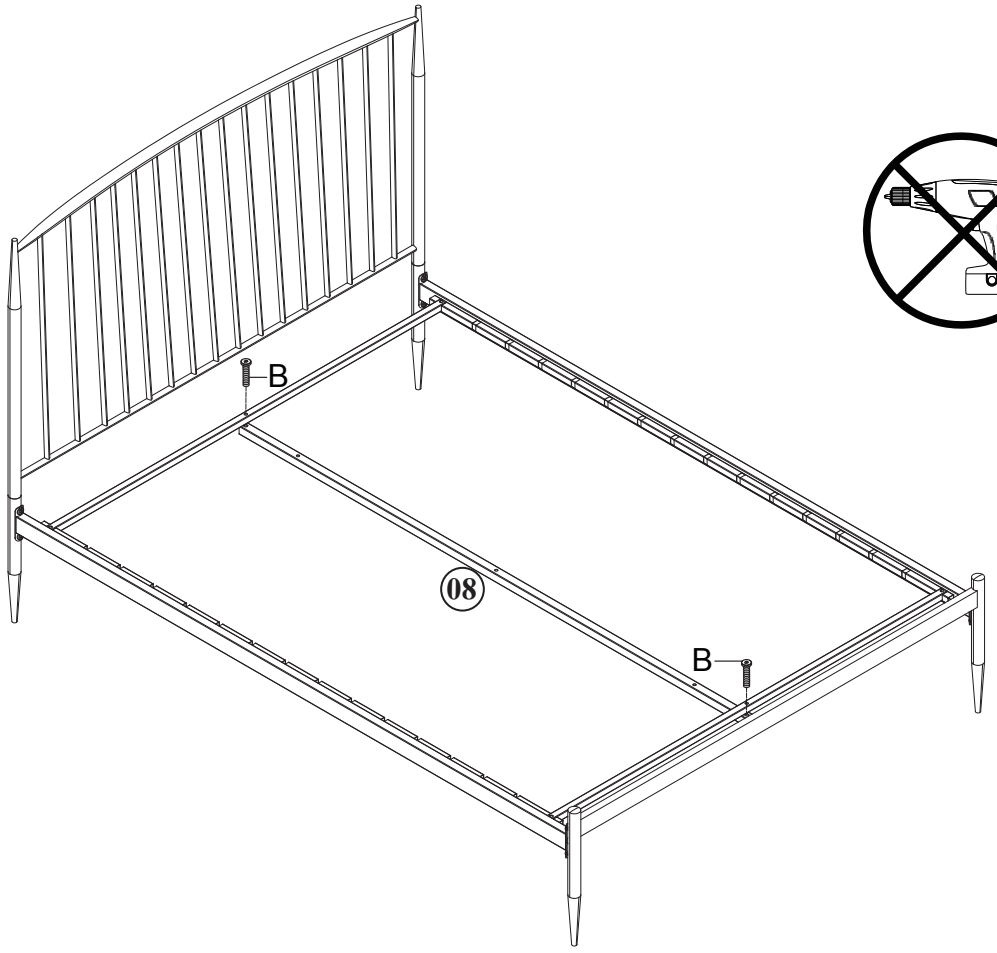

5

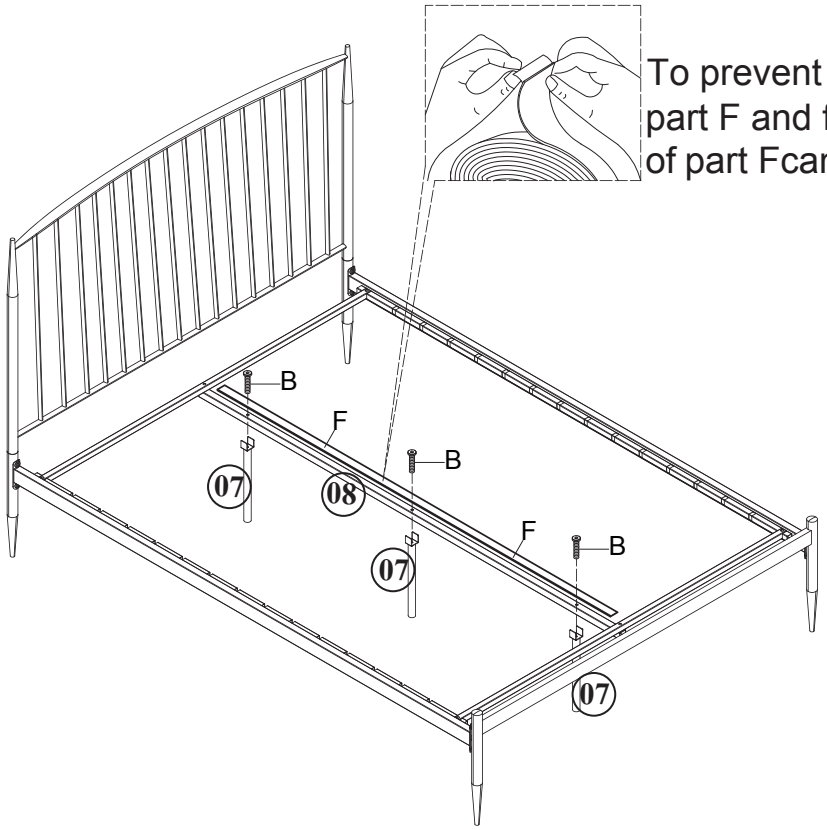

To prevent friction noise, unroll part F and fit it on part 8, the lenght of part Fcan cut as you will.

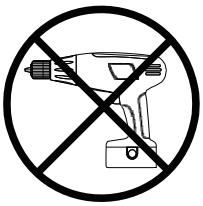

6

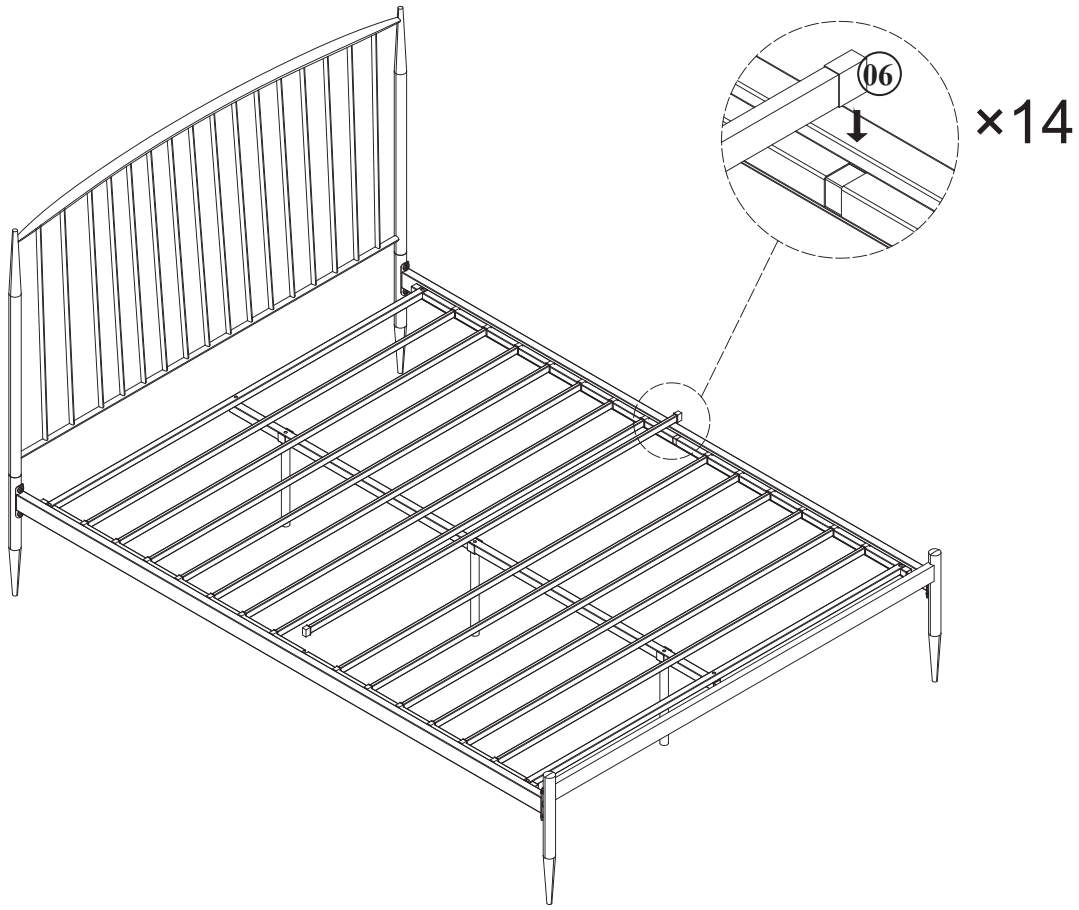

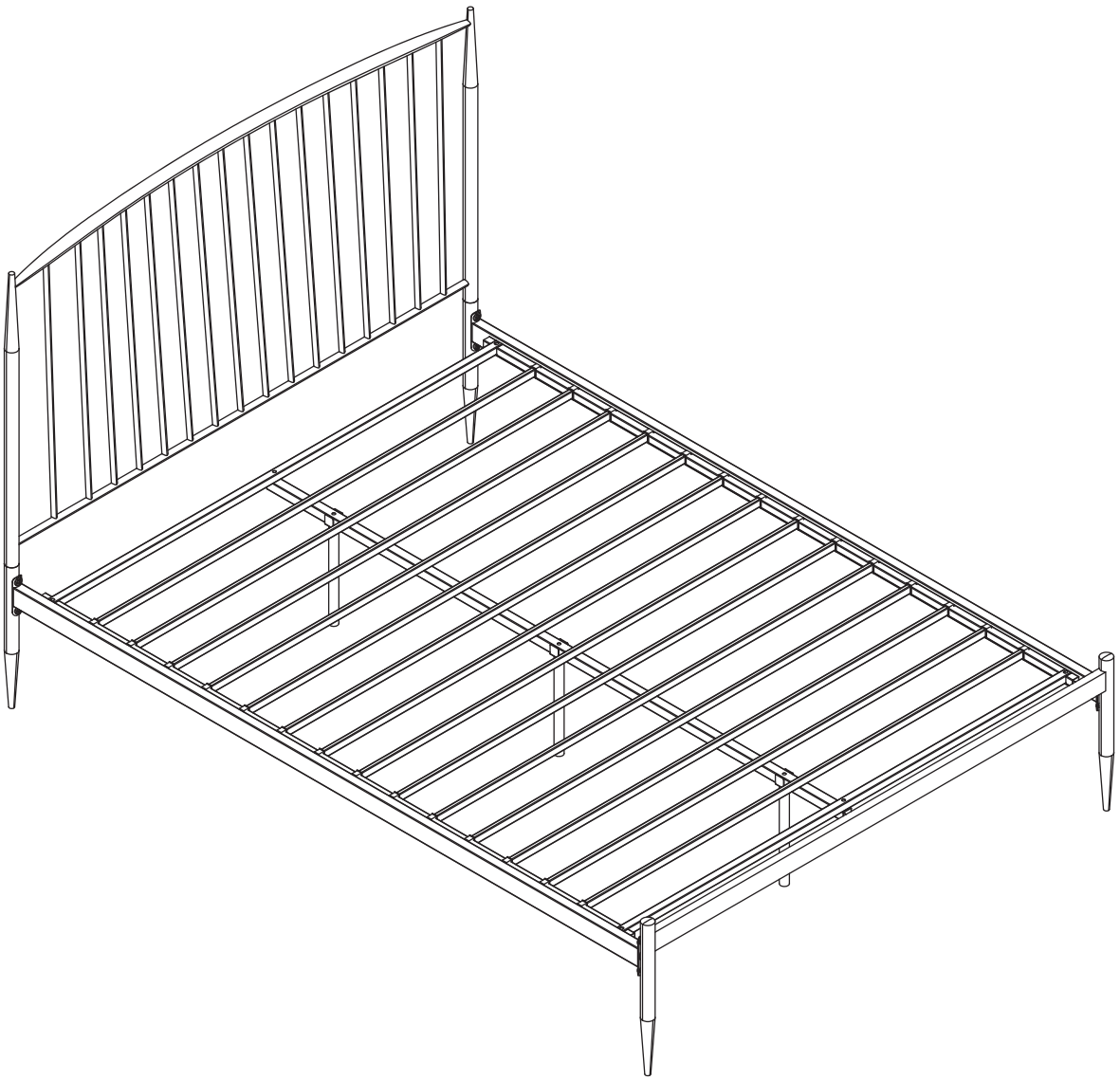

Please dispose of all packaging safely.

General Care & Maintenance

Wipe clean with a slightly damp cloth.
Avoid the use of all household cleaners and abrasives.

Periodically check all screw & fixings to ensure they are secure.

When moving your product, carefully lift into place. Never drag or push the product across the floor as this will cause damage to the joints. If the product is used on hard flooring, such as wood or laminated floor, you must place some protection under the legs to stop the product from moving. If this is not adhered to, it could result in failure to the product that will invalidate the warranty.

For more information on cleaning and product care visit:
https://www.happybeds.co.uk/help-and-advice

Notes

In the unlikely event that you have problems putting this product together or have damaged or missing parts, please contact us by visiting:
https://www.happybeds.co.uk/customer-service