happybeds

Assembly Instructions

Kurt Wooden Mid Sleeper Bed Frame

Important before assembly:

Read these instructions carefully before assembling or using the product.

Please check the contents of the boxes before attempting to assemble this product. The instructions will have a checklist of parts and fittings.

It would be sensible to lay a rug or a carpet on the floor where you intend to assemble the product, to avoid scratches and damaging the product or the floor.

Assemble the product as close to its intended final location/room as possible.

Do NOT use any power tools as this may damage the frame.

Health & Safety:

This product or some parts of this product will be heavy. Please use an assistant when lifting.

Please keep small parts out of reach of children.
Always use on a level, even surface.
DO NOT jump on the product or any of its parts.
DO NOT use this product if any parts are missing, damaged or worn.
DO NOT use this product unless all fixings are secured.

Please keep these instructions for future reference.

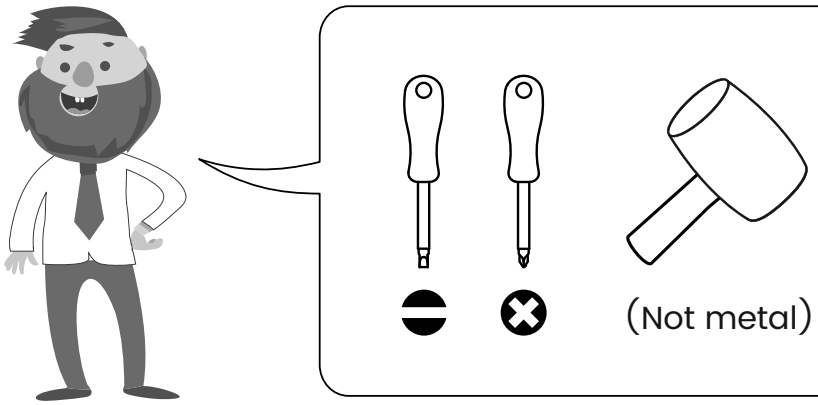

These tools are not necessary, but may help to assemble certain parts of the product.

Do NOT use any power tools as this may damage the frame.

This product or some parts of this product will be heavy. Please use an assistant when lifting.

Never drag or push the pieces across a hard or stone floor as this will cause damage to the joints. Use a carpet or a rug for extra care.

If you have problems assembling or have damaged or missing pieces, please contact us by visiting:
https://www.happybeds.co.uk/customer-service

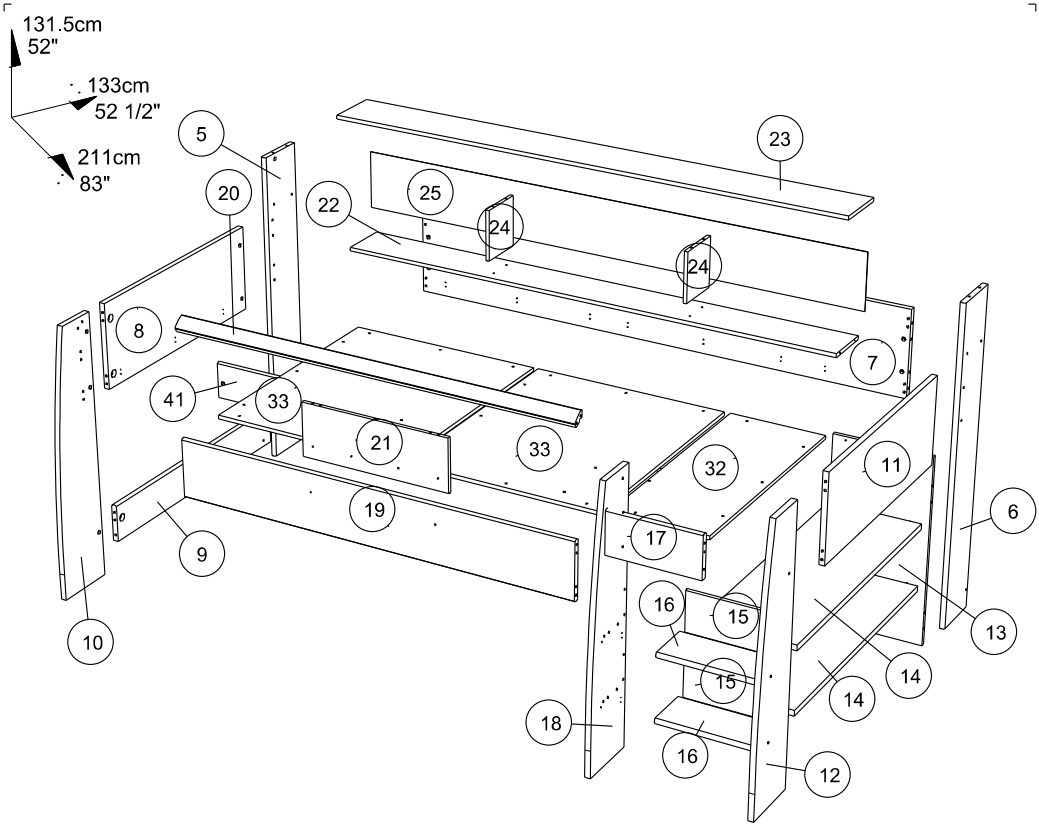

		mm			inch		
24	x 2	202	184	15	7 15/16	7 1/4	9/16
15	x 2	365	160	15	14 3/8	6 5/16	9/16
16	x 2	365	171	22	14 3/8	6 3/4	7/8
17	x 1	365	171	22	14 3/8	6 3/4	7/8
21	x 1	595	212	15	23 7/16	8 3/8	9/16
13	x 1	763	392	15	30 1/16	15 7/16	9/16
8	x 1	900	347	22	35 7/16	13 11/16	7/8
11	x 1	900	347	22	35 7/16	13 11/16	7/8
32	x 1	924	382	15	36 3/8	15 1/16	9/16
33	x 2	946	782	15	37 1/4	30 13/16	9/16
14	x 2	1037	365	22	40 13/16	14 3/8	7/8
9	x 1	1038	153	22	40 7/8	6	7/8
10	x 1	1085	242	22	42 11/16	9 1/2	7/8
12	x 1	1085	242	22	42 11/16	9 1/2	7/8
18	x 1	1085	242	22	42 11/16	9 1/2	7/8
5	x 1	1300	206	22	51 3/16	8 1/8	7/8
6	x 1	1300	206	22	51 3/16	8 1/8	7/8
20	x 1	1613	58	28	63 1/2	2 5/16	1 1/16
19	x 1	1613	236	22	63 1/2	9 5/16	7/8
41	x 1	2044	155	22	80 1/2	6 1/8	7/8
22	x 1	2044	189	15	80 1/2	7 7/16	9/16
7	x 1	2044	350	22	80 1/2	13 3/4	7/8
23	x 1	2108	212	15	83	8 3/8	9/16
25	x 1	2084	228	3	82 1/16	9	1/8

			mm			inch		
34	x	2	497	368	15	19 9/16	14 1/2	9/16
29	x	1	757	326	15	29 13/16	12 13/16	9/16
30	x	1	757	350	15	29 13/16	13 3/4	9/16
27	x	1	1001	155	15	39 7/16	6 1/8	9/16
28	x	1	1001	322	15	39 7/16	12 11/16	9/16
26	x	1	1001	324	22	39 7/16	12 3/4	7/8
31	x	1	1017	730	3	40 1/16	28 3/4	1/8

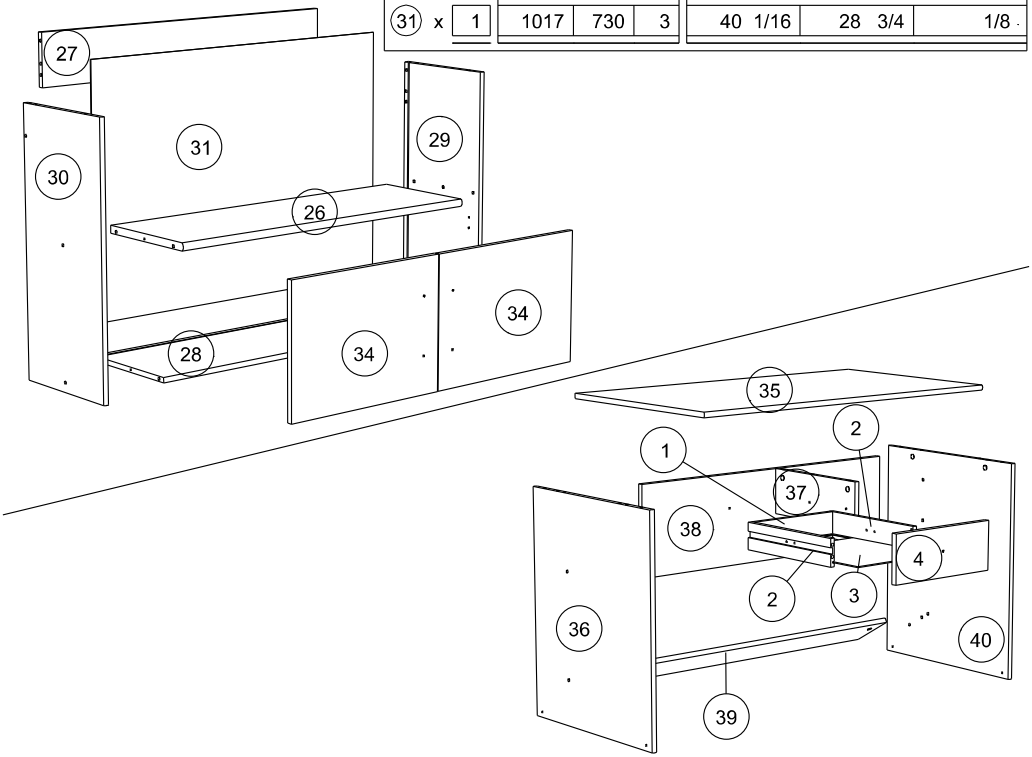

			mm			inch		
4	x	1	322	130	15	12 11/16	5 1/8	9/16
37	x	1	350	134	15	13 3/4	5 1/4	9/16
36	x	1	658	546	15	25 7/8	21 1/2	9/16
40	x	1	658	546	15	25 7/8	21 1/2	9/16
39	x	1	902	150	15	35 1/2	5 7/8	9/16
38	x	1	902	269	15	35 1/2	10 9/16	9/16
35	x	1	1030	592	15	40 9/16	23 5/16	9/16
2	x	2	335	75	13	13 3/16	2 15/16	1/2
1	x	1	276	75	13	10 7/8	2 15/16	1/2
3	x	1	334	286	3	13 1/8	11 1/4	1/8

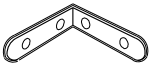
LN x 28

EP x 2

VW x 5

BML x 26

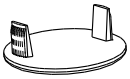
ADP x 5

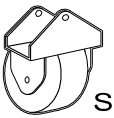
SD x 4

AKG x 4

Ai x 14

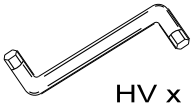
HV x 1

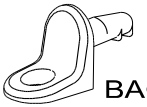
BAG x 4

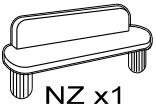
NZ x1

WA x6

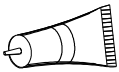
CF x 4

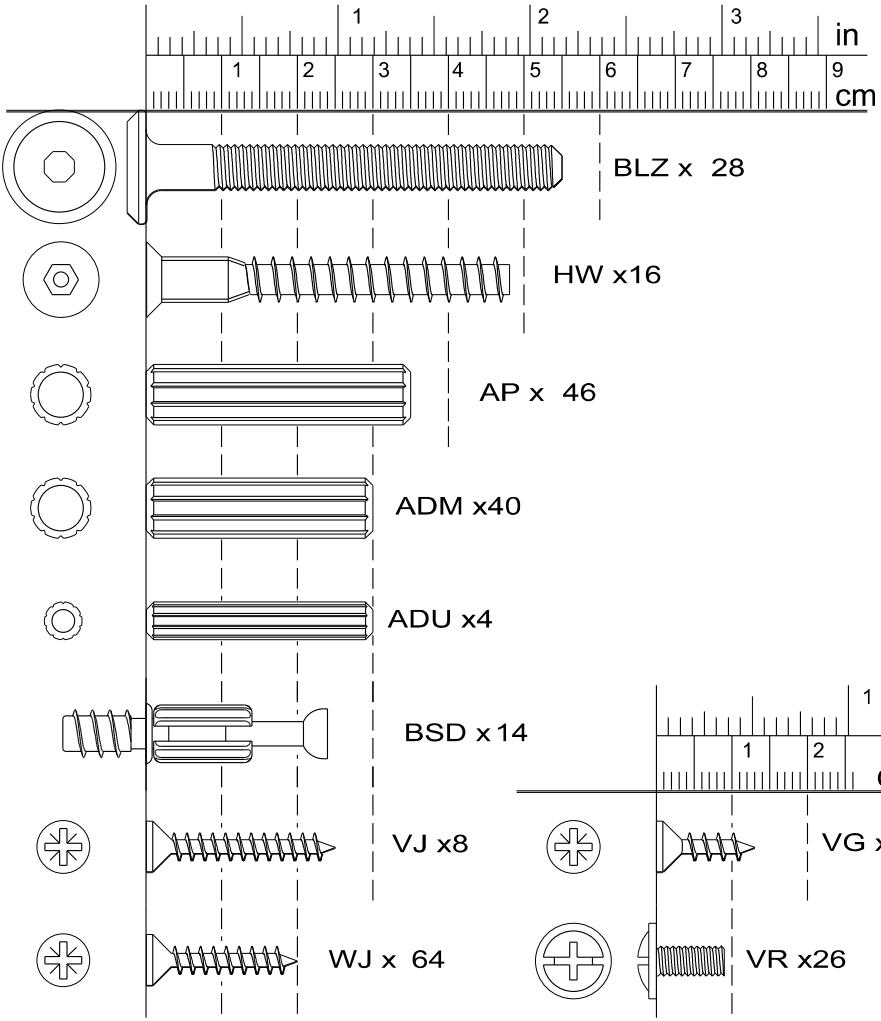

BOU x1

POi x2

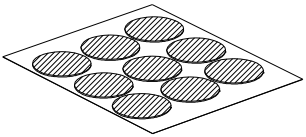

BRC x2

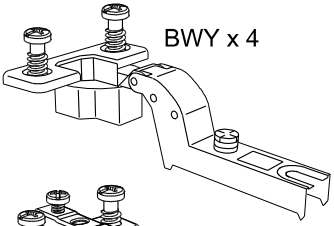

BWY x 4

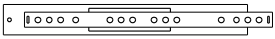

Ci x2

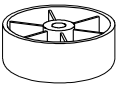

BXC x 1

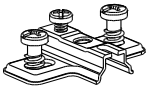

BWU x4

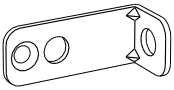

BLL x 2

AHX x 33

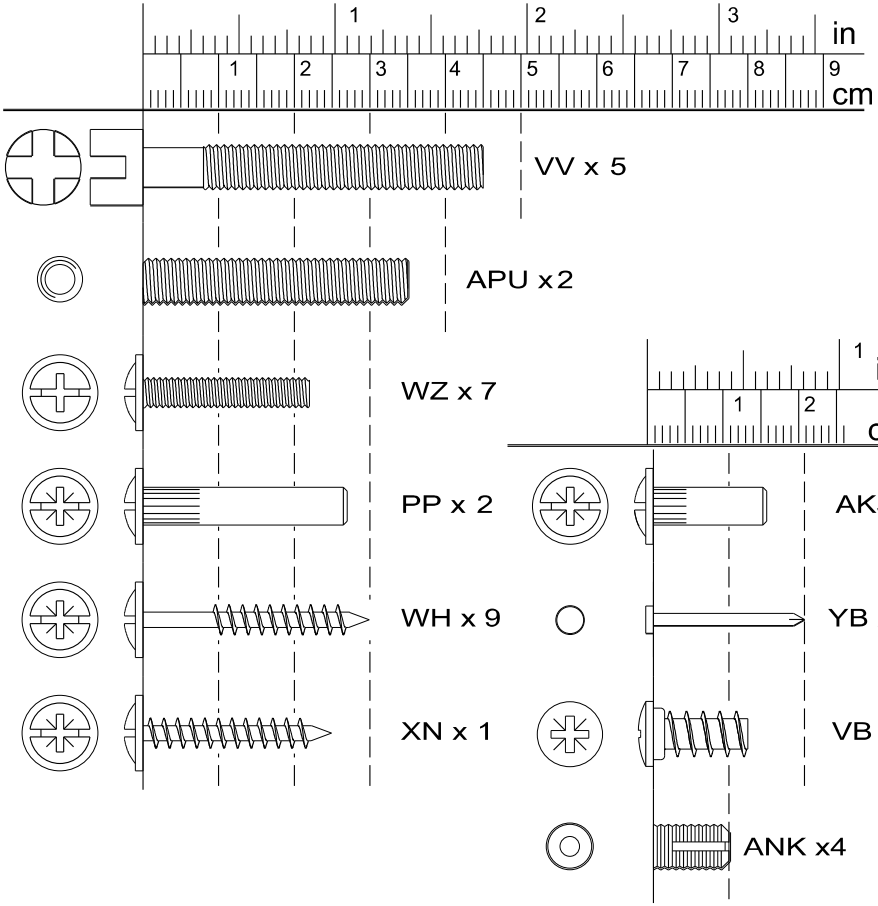

1

ADM x 2

BSD x 2

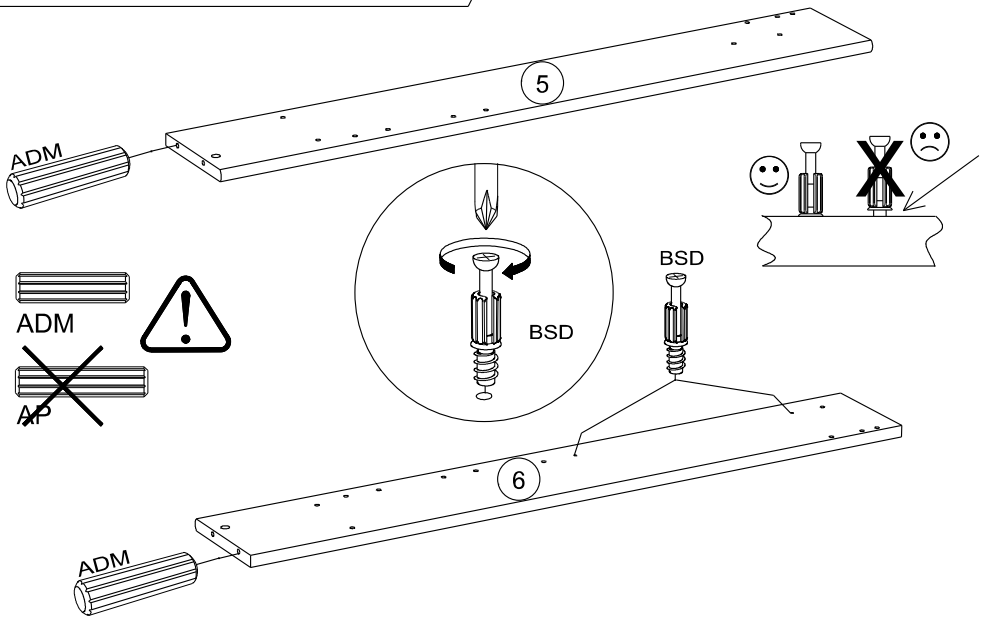

2

AP x 4

AHX x 4

CF x 1

LN x 7

WJ x 14

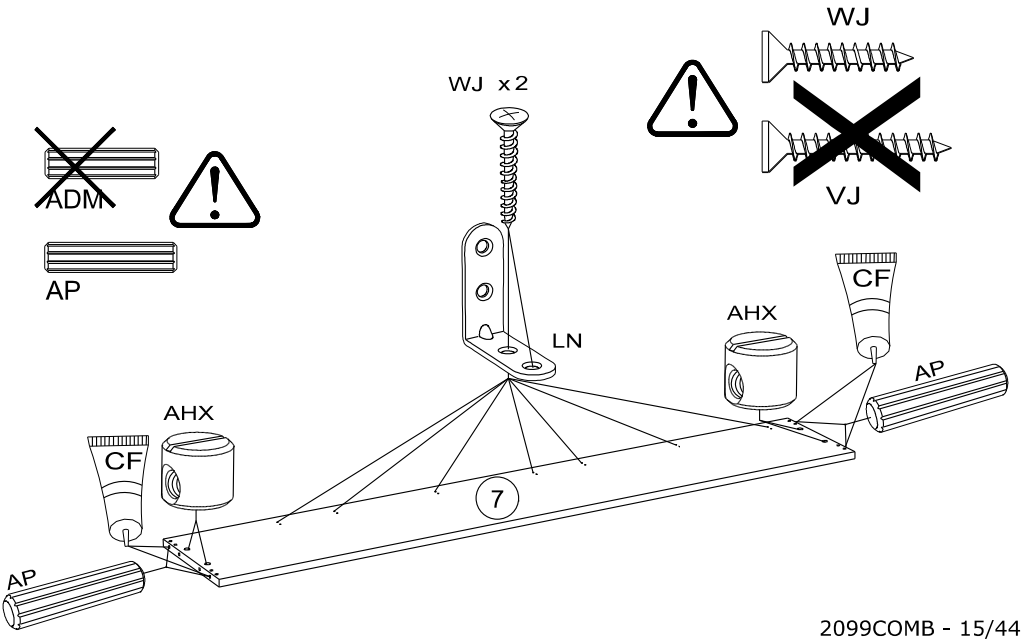

3

AP x 10

AHX x 7

LN x 3

WJ x 6

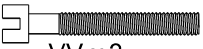
VV x 3

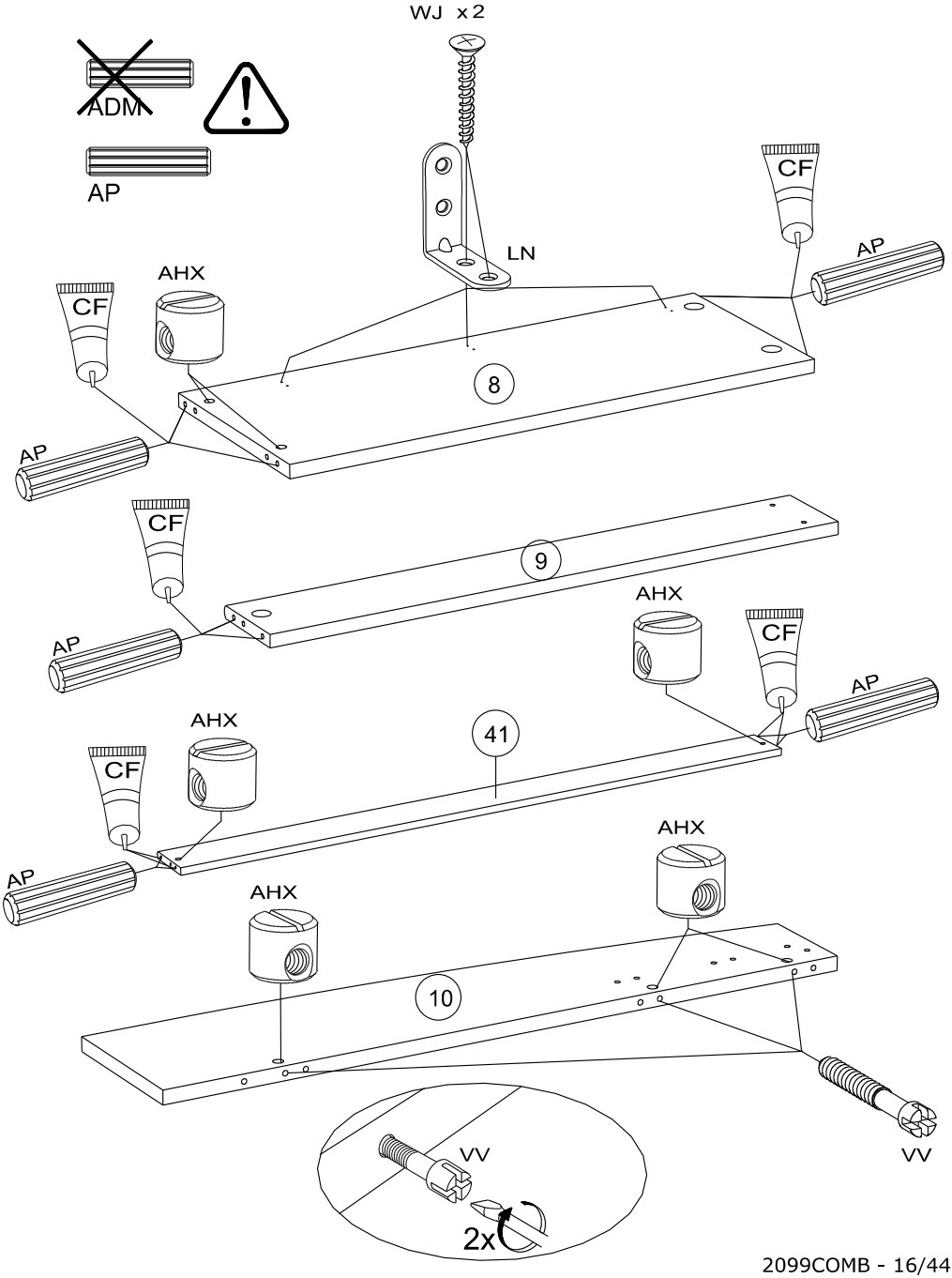

4

VW x 3

ADP x 3

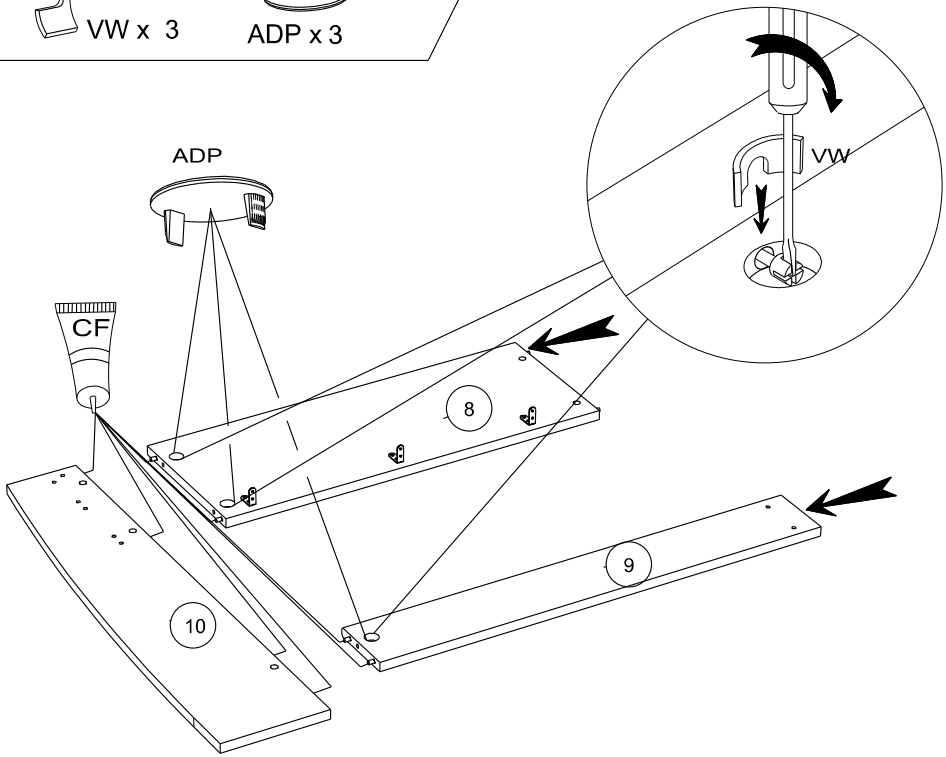

5

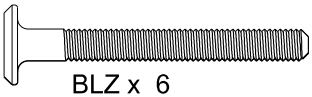

BLZ x 6

BML x 6

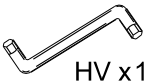

HV x1

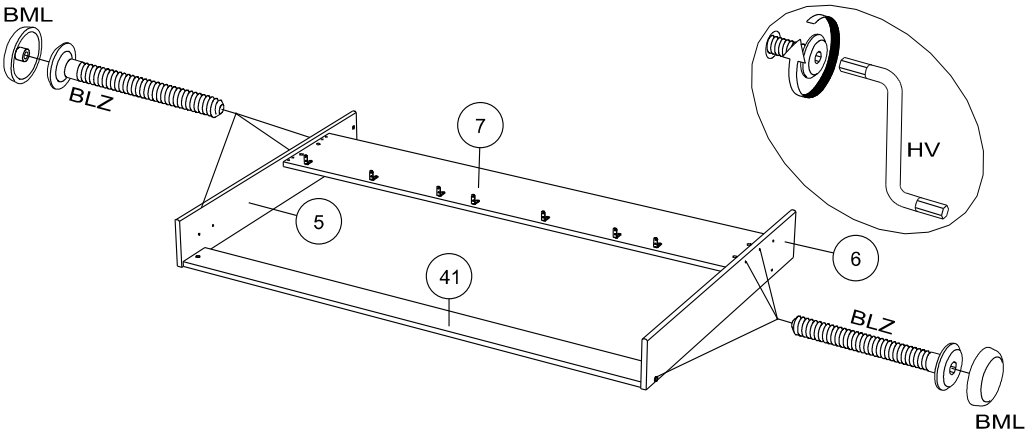

6

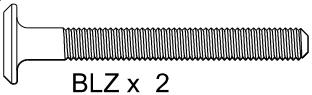
BLZ x 2

BML x 4

AKG x 4

APU x 2

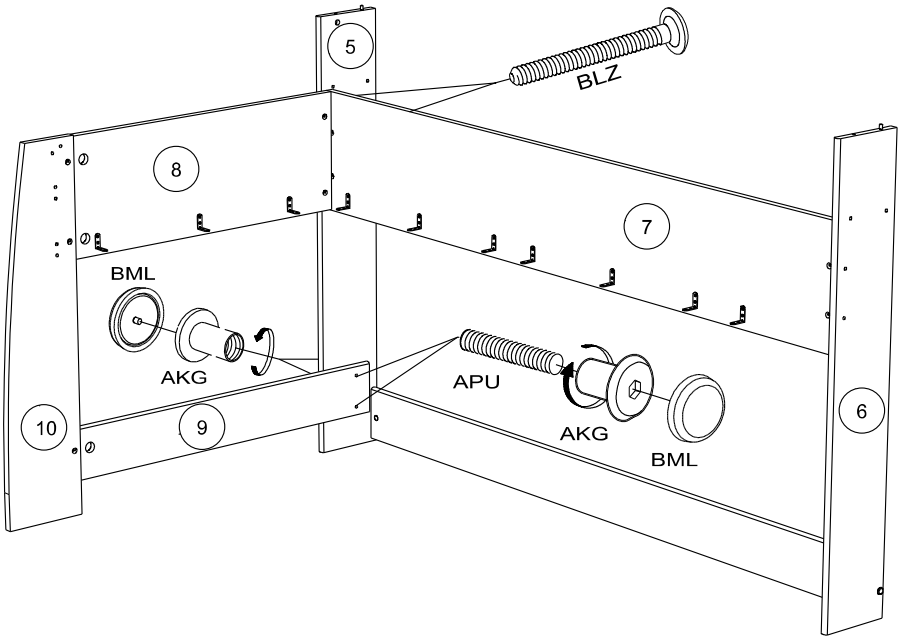

7

AP x 4

AHX x 2

LN x 3

WJ x 6

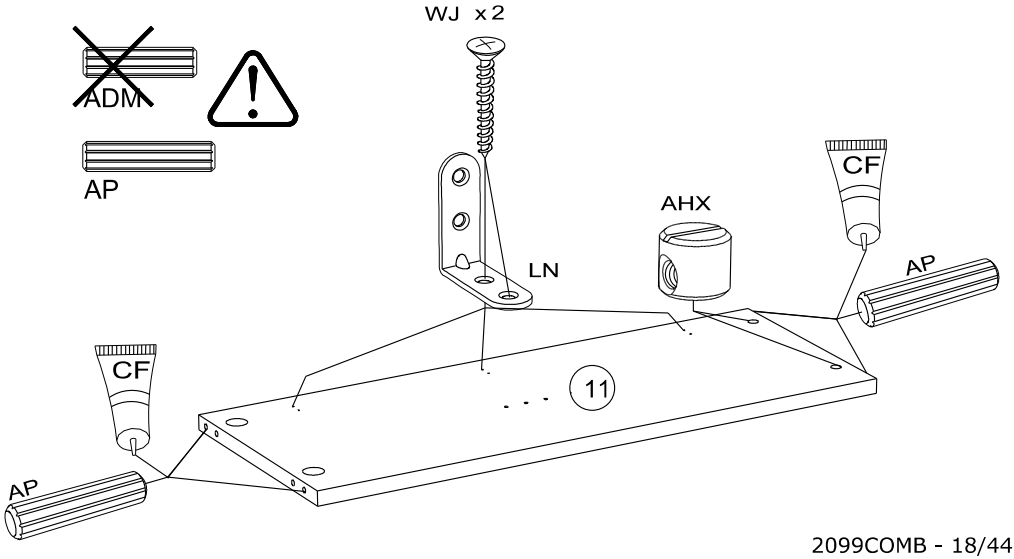

8

AHX x 2

VV x 2

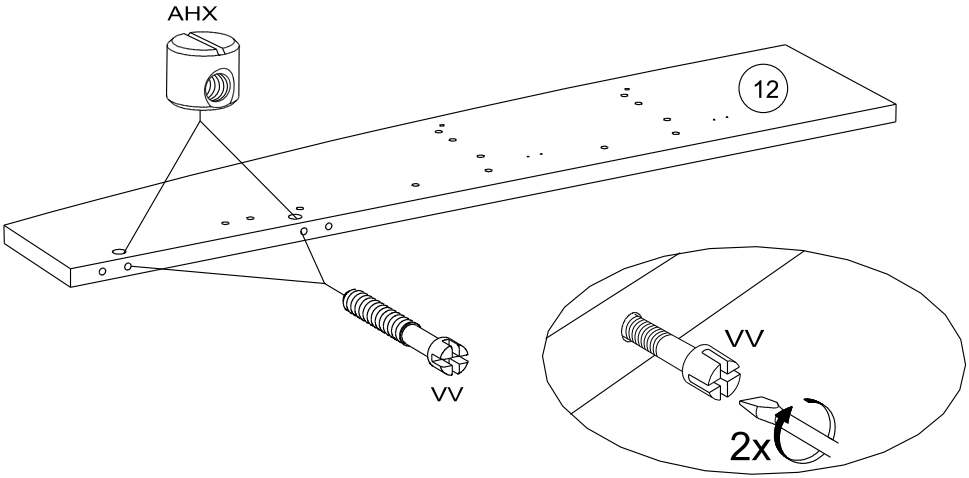

9

VW x 2

ADP x 2

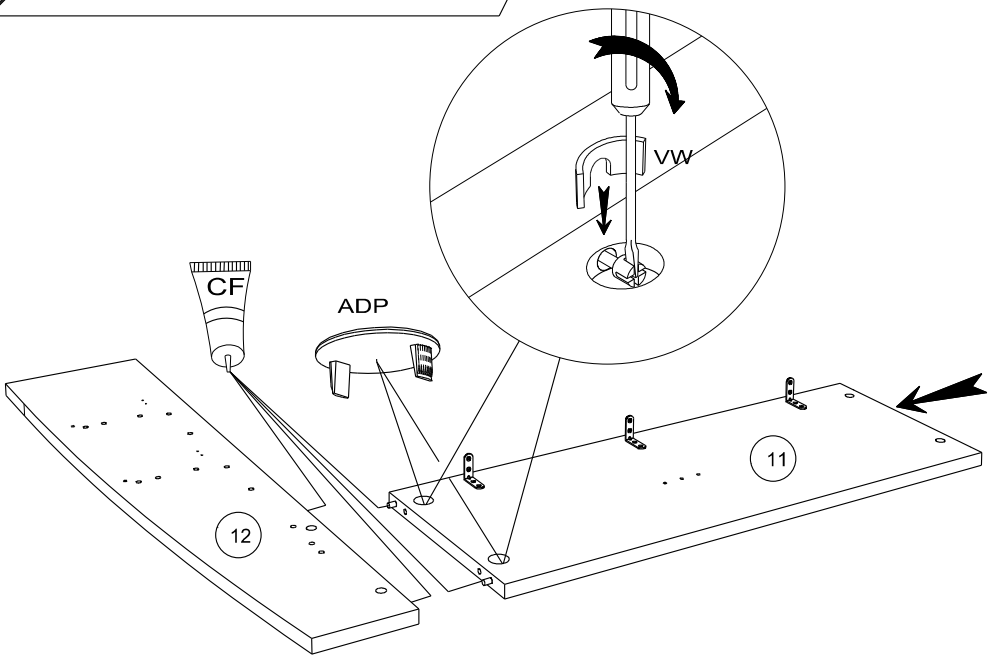

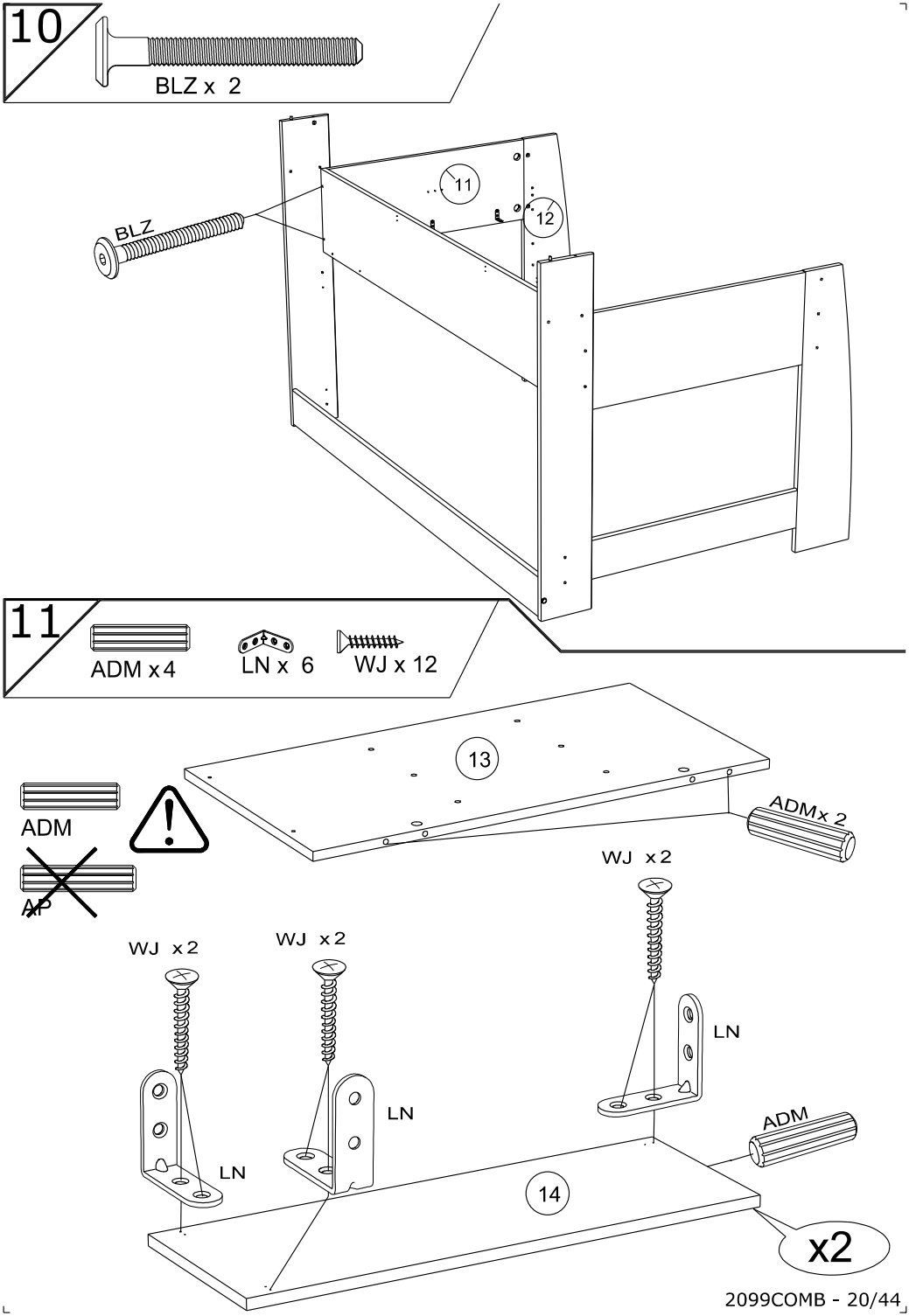
10
BLZ x 2
BLZ
11
12
11
ADM x4
LN x 6
WJ x 12
13
ADM
AP
ADMx 2
WJ x2
WJ x2
WJ x2
LN
LN
LN
ADM
14
x2

12

Ai x 2

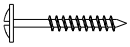

WH x 2

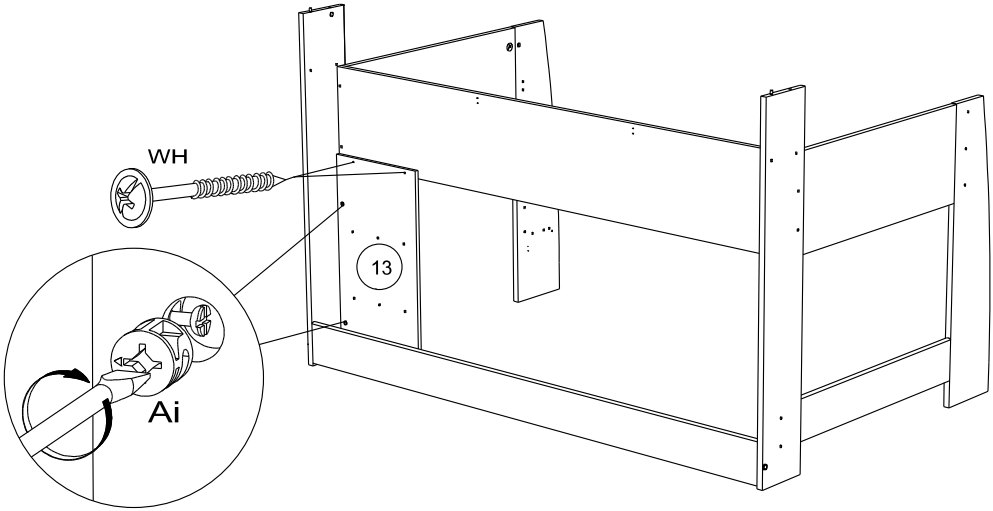

13

HW x 4

WJ x 4

VG x 4

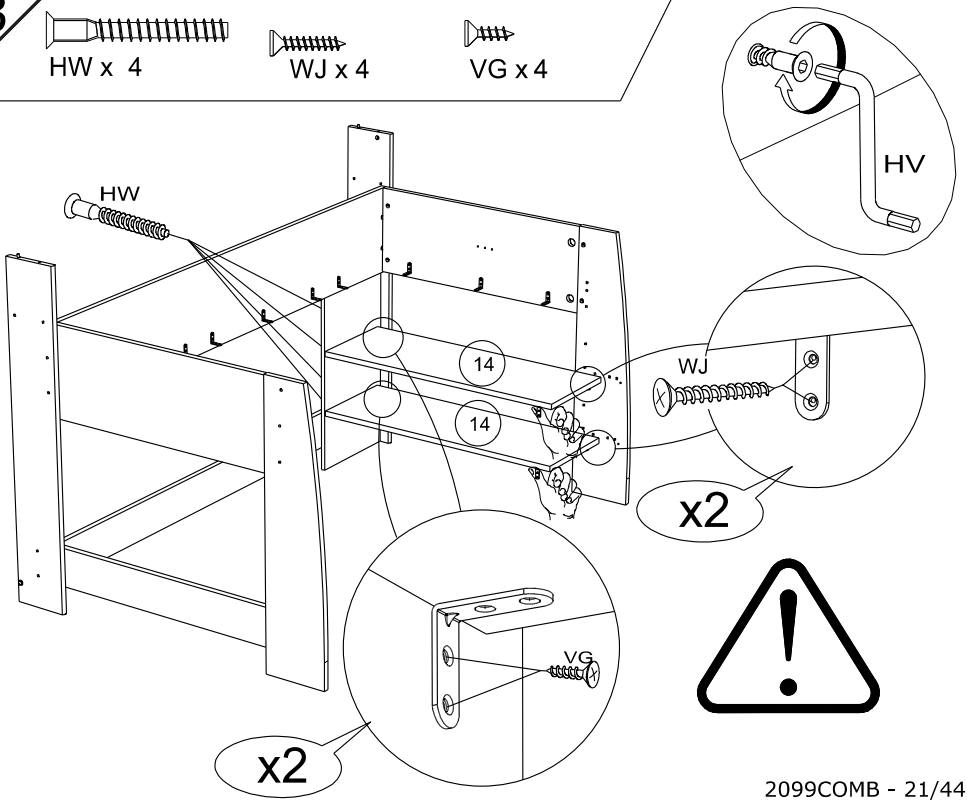

14

ADM x 8

AP x 12

AHX x 6

LN x 1

WJ x 2

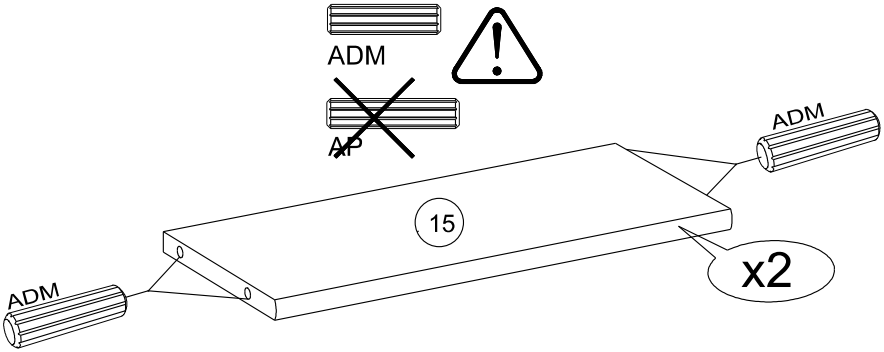

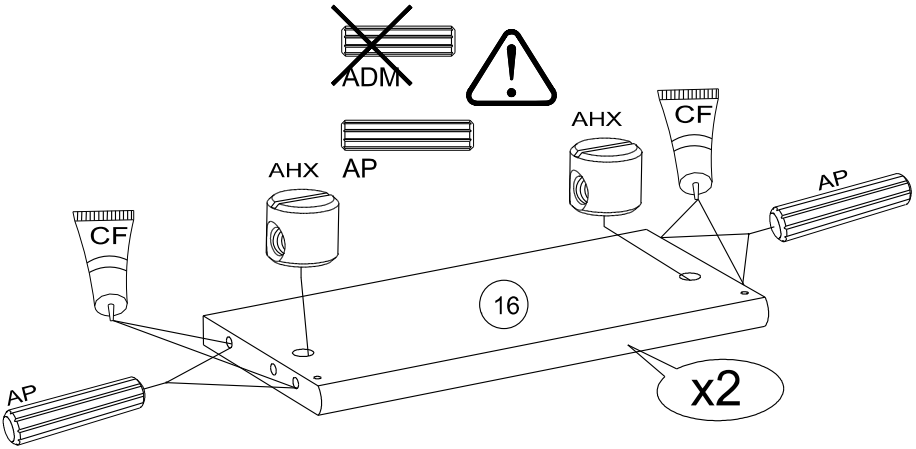

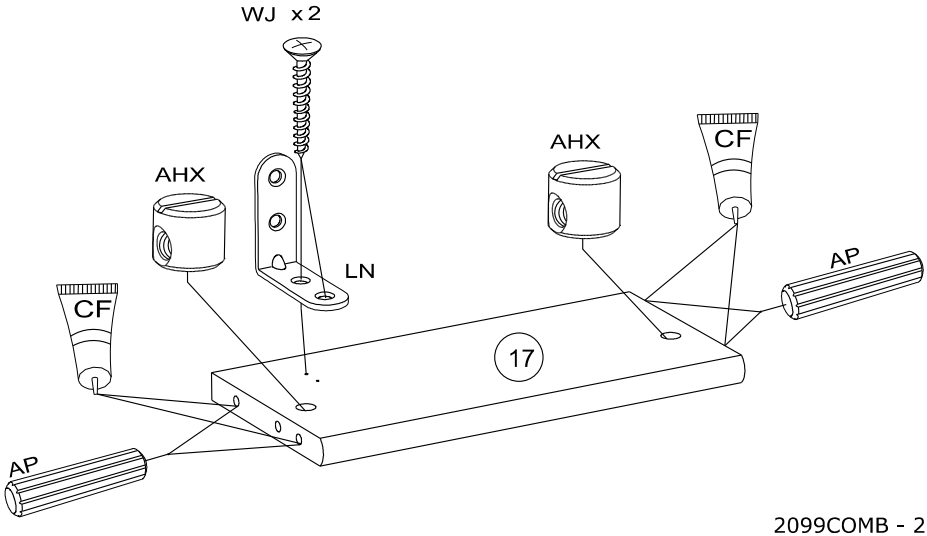

15

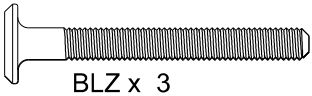

BLZ x 3

BML x 3

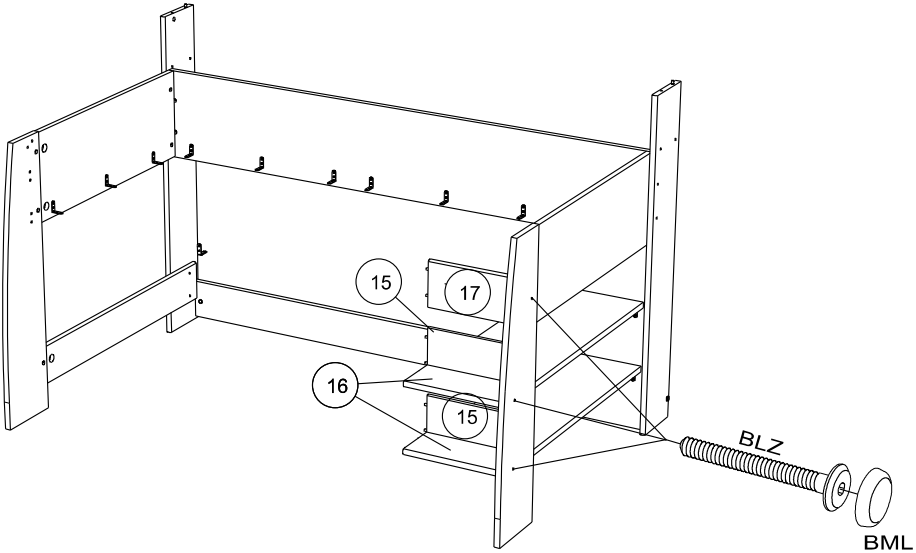

16

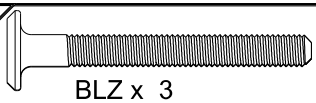

BLZ x 3

BML x 3

WJ x 4

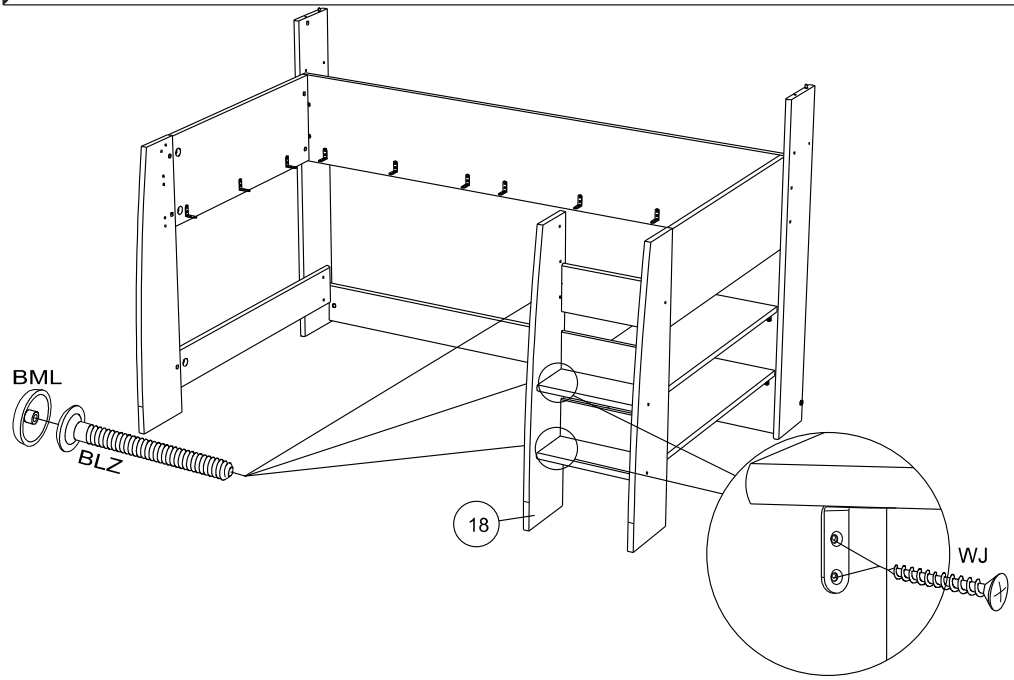

17

AP x 6 | AHX x 6 | LN x 6 | WJ x 12 | BSD x 2

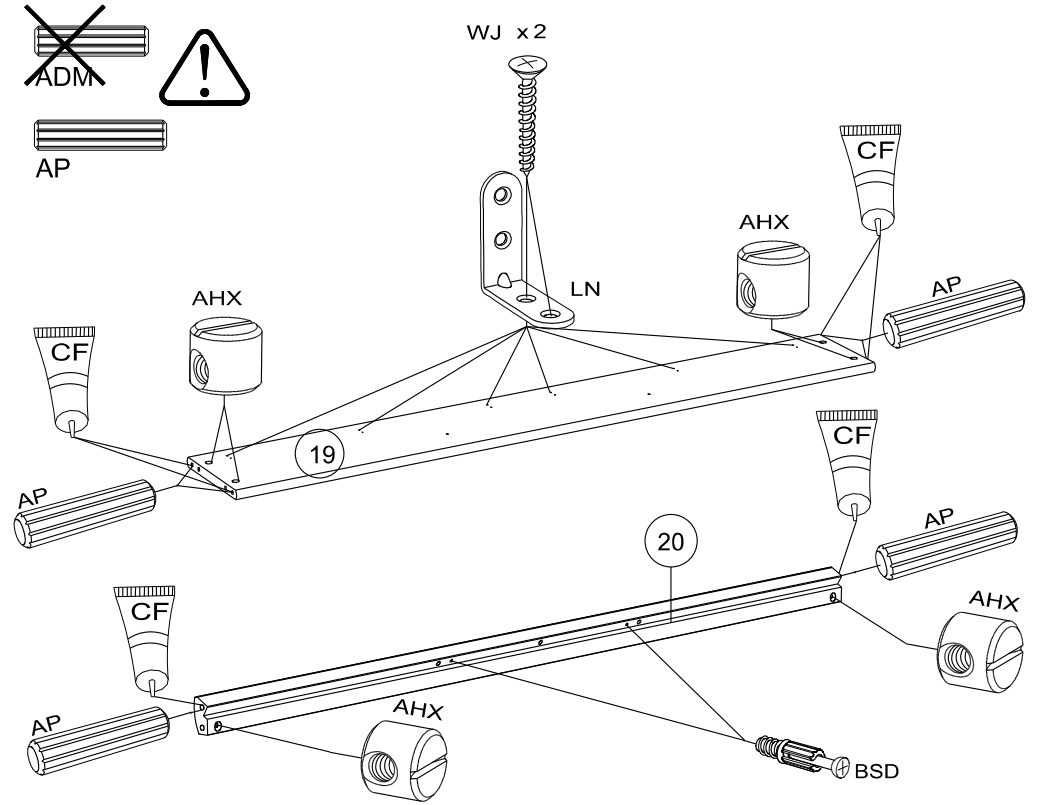

18

ADM x 3

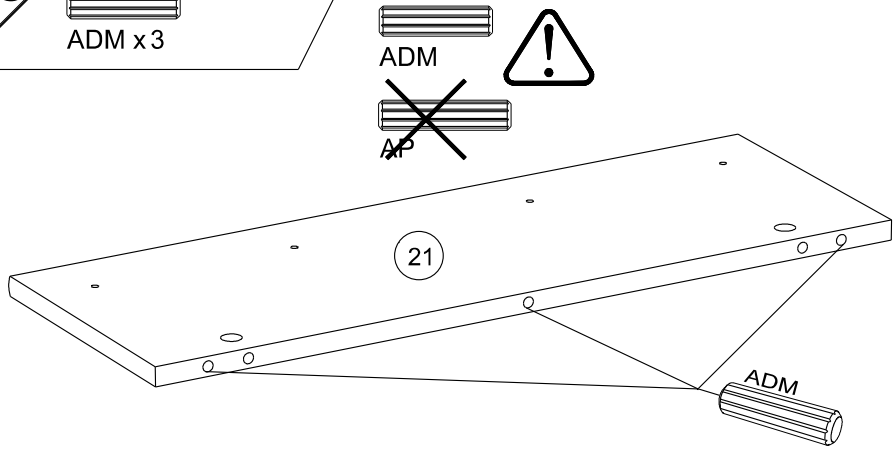

19

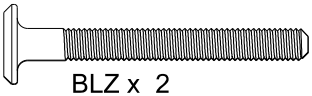

BLZ x 2

BML x 2

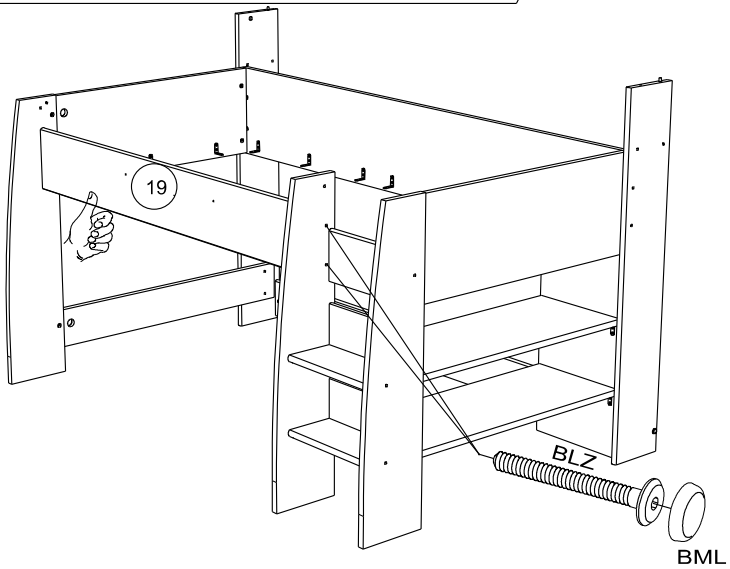

20

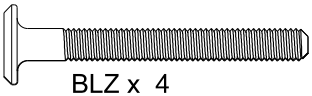

BLZ x 4

BML x 4

BAG x 4

VB x 4

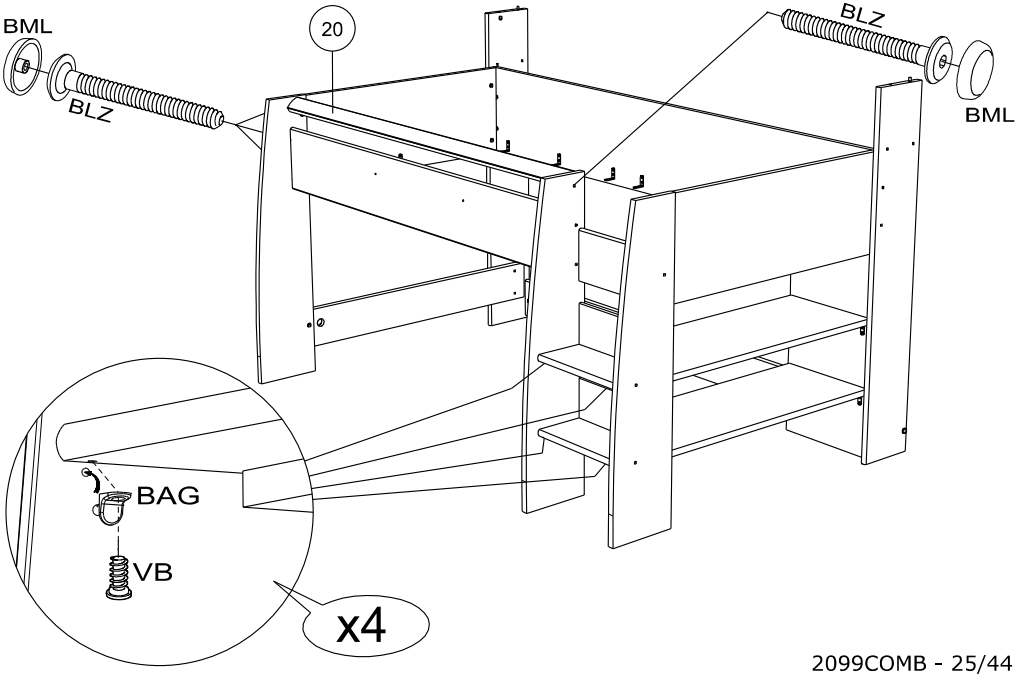

21

Ai x 2

WZ x 2

PP x 2

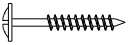
WH x 2

BRC x1

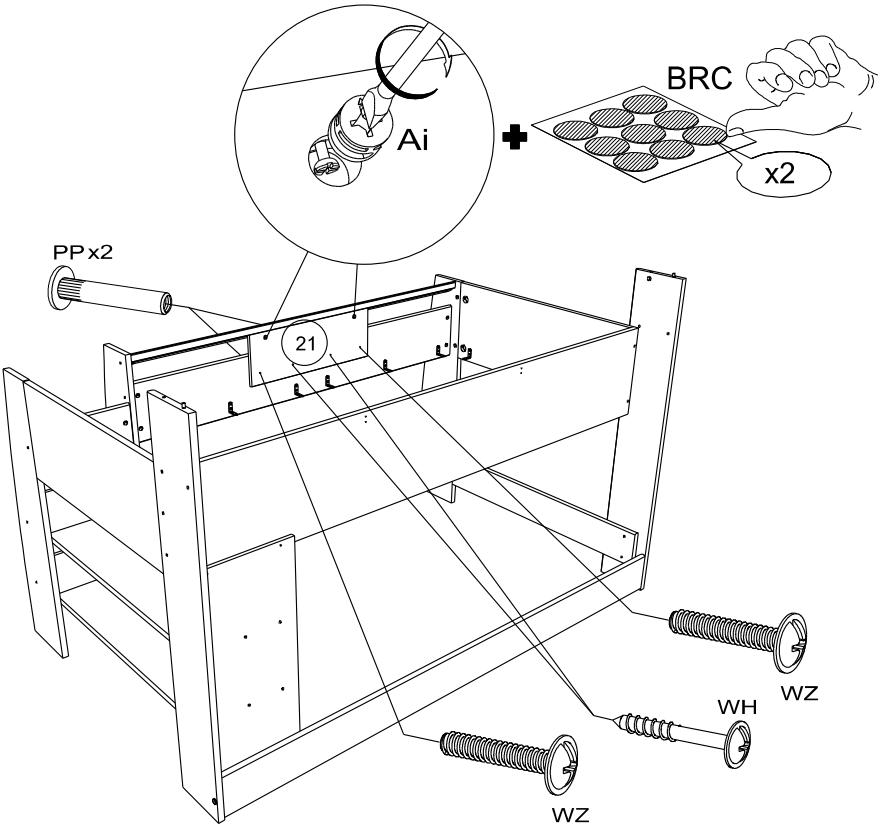

22

LN x 2

VG x 4

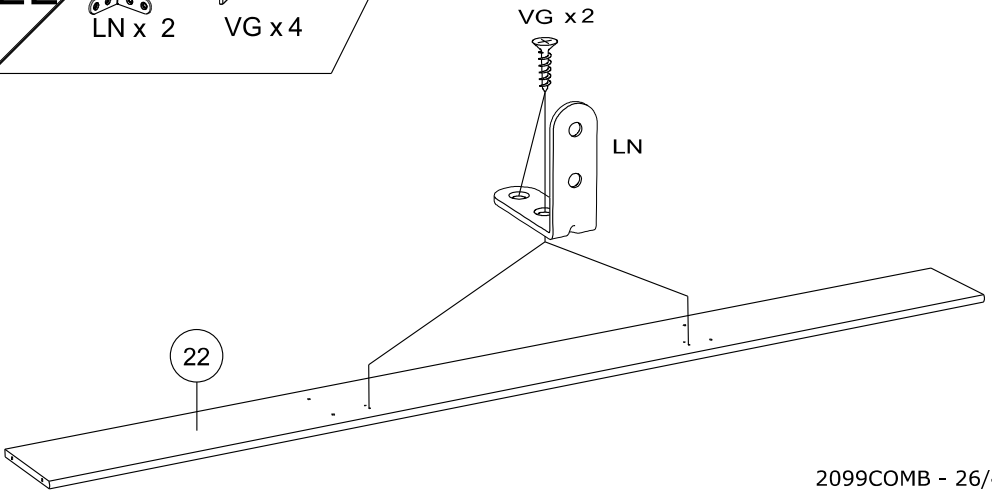

23

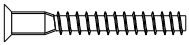

HW x 4

WA x 4

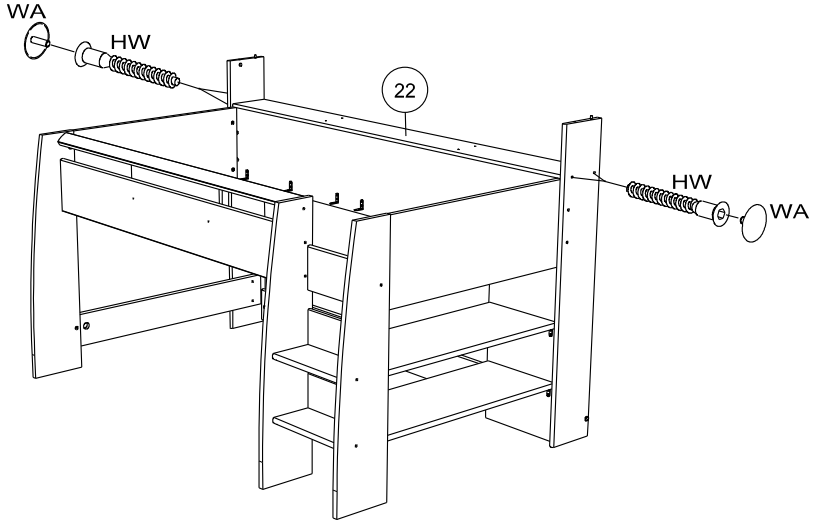

24

BSD x 4

ADM x 2

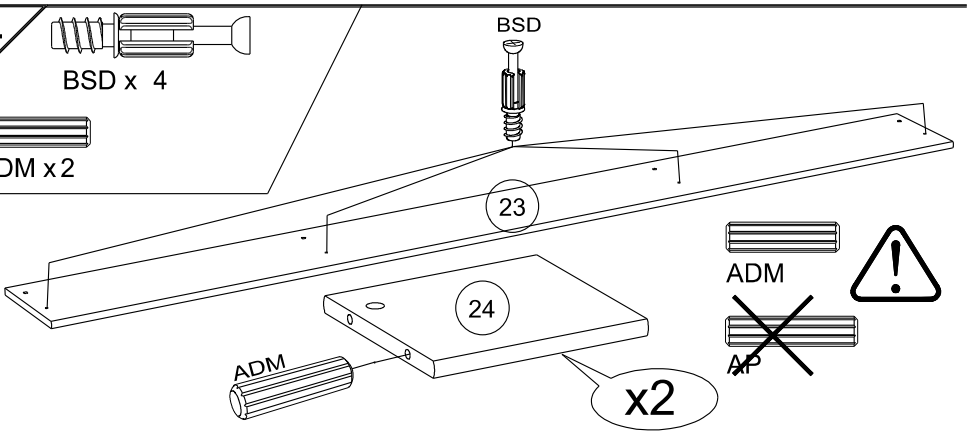

25

Ai x 2

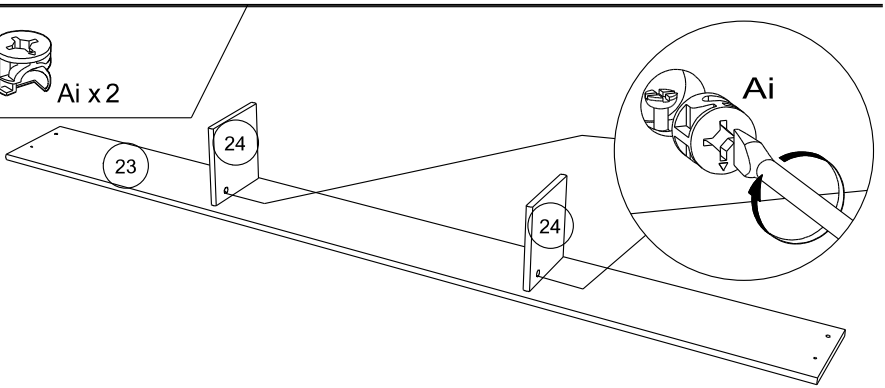

26

Ai x 2

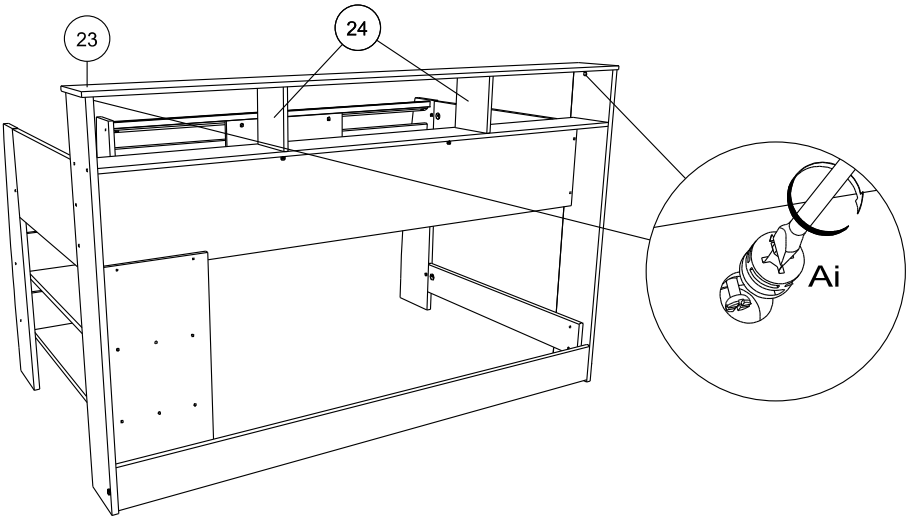

27

WJ x 4

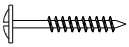

WH x 4

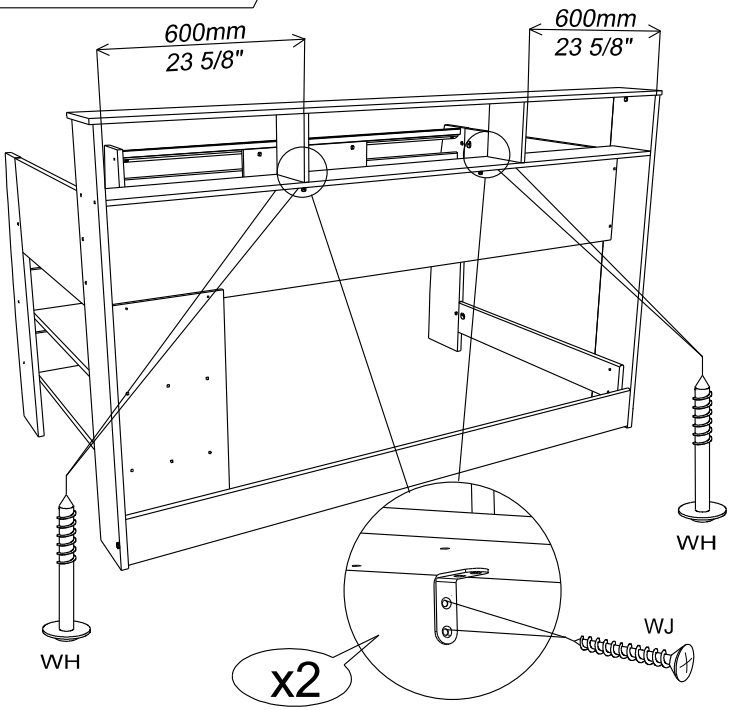

28

YB x 22

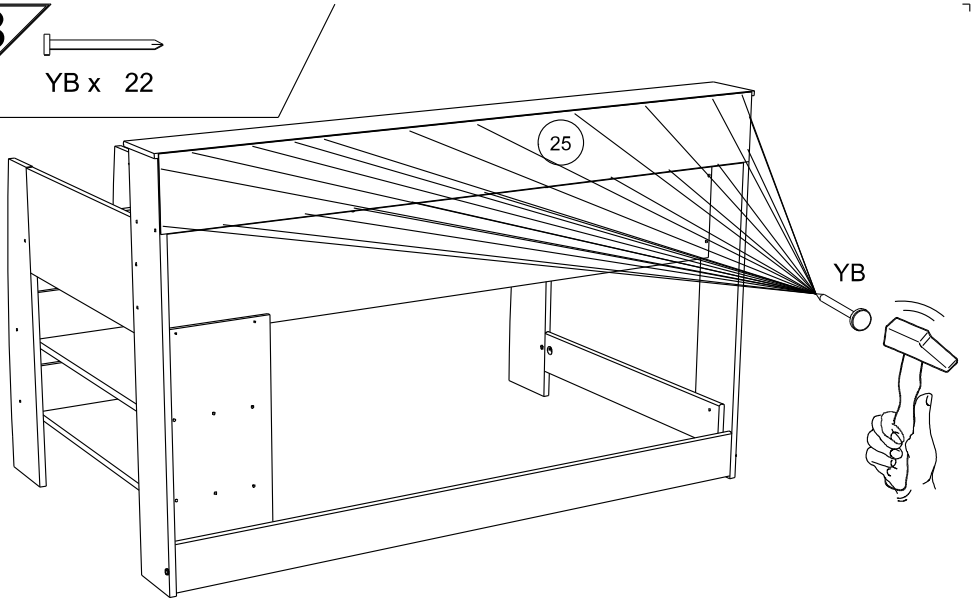

29

VJ x 4

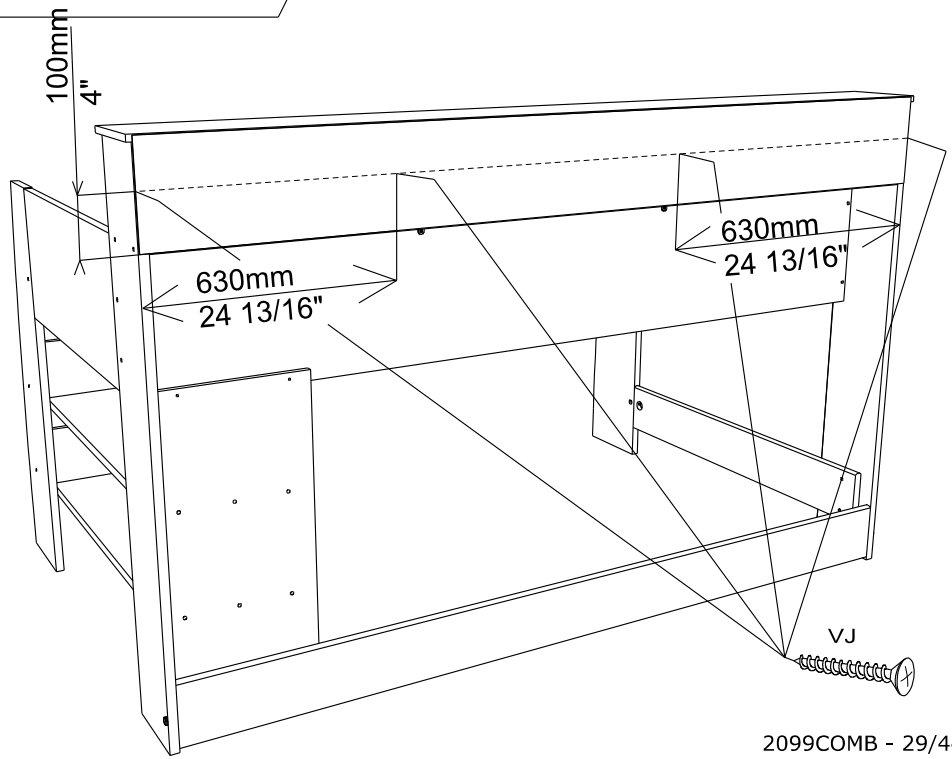

30

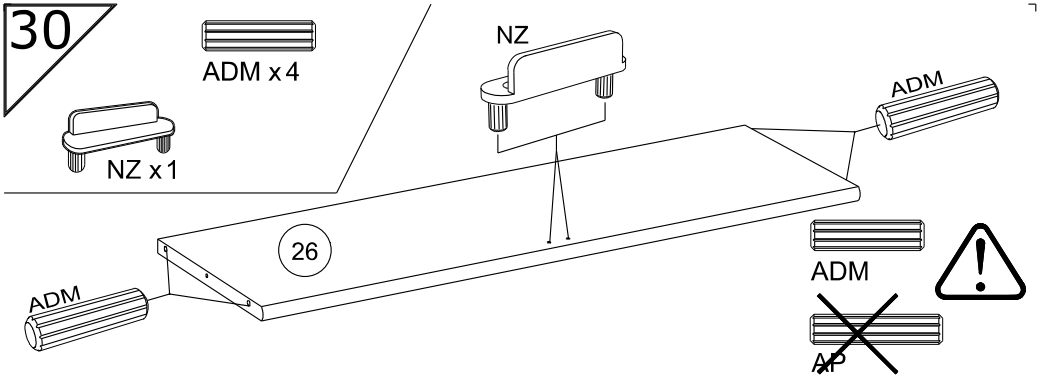
ADM x 4
NZ x 1
NZ
ADM
26
ADM
ADM
AP

31

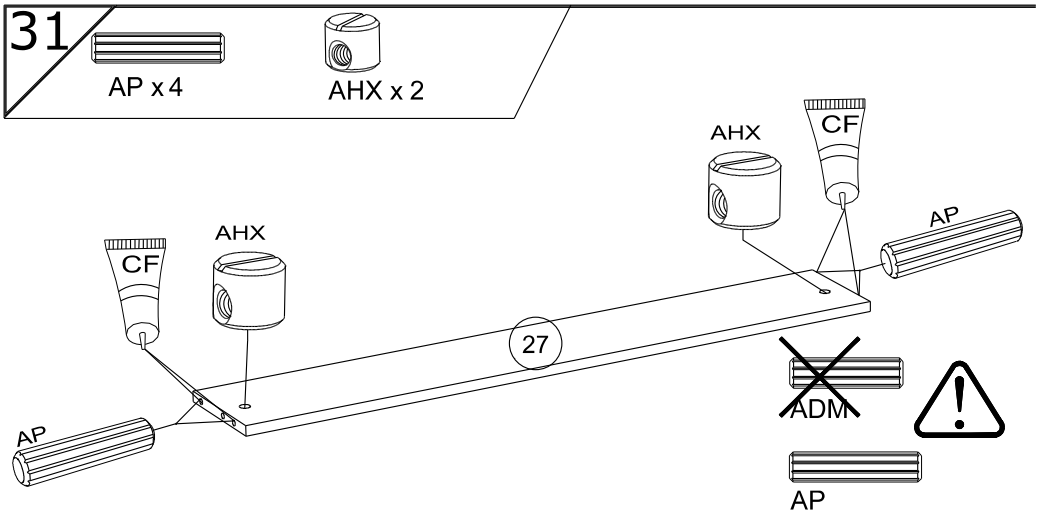
AP x 4
AHX x 2
AHX
CF
AP
CF
AHX
27
ADM
AP
AP

32

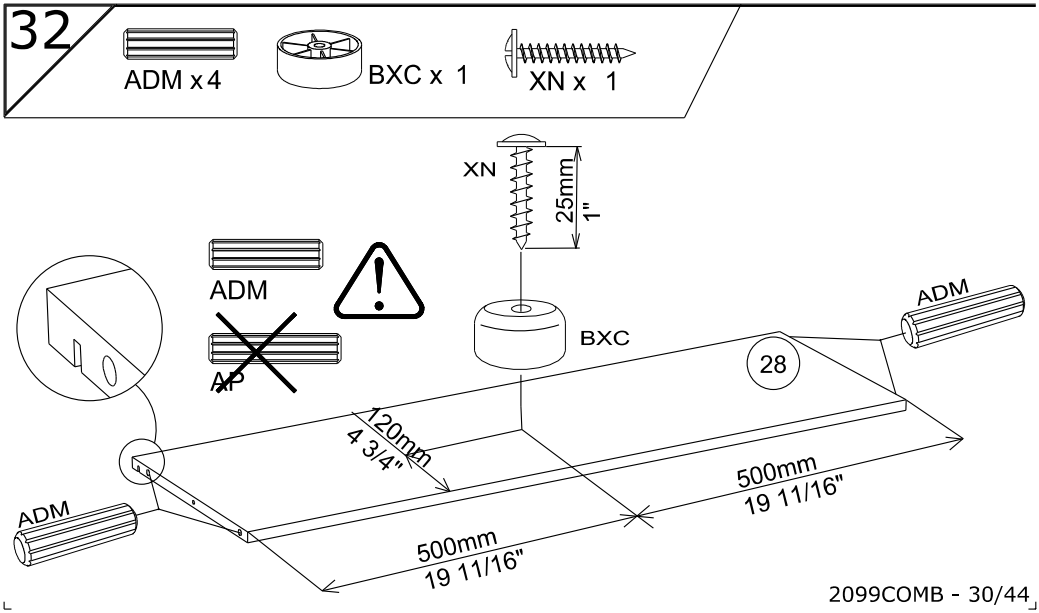
ADM x 4
BXC x 1
XN x 1
XN
25mm
1"
ADM
AP
BXC
ADM
28
120mm
4 3/4"
500mm
19 11/16"
ADM
500mm
19 11/16"

33

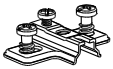

BWU x4

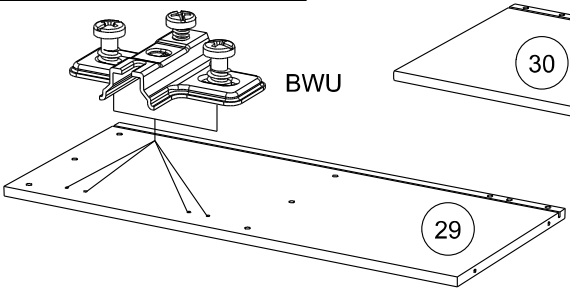

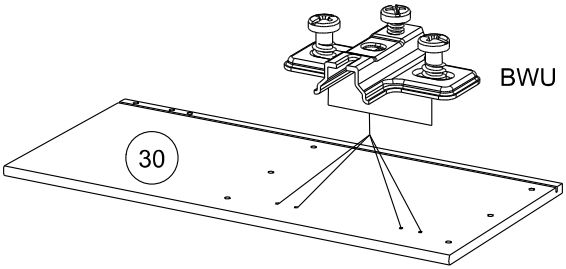

34

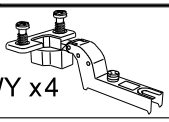

BWY x4

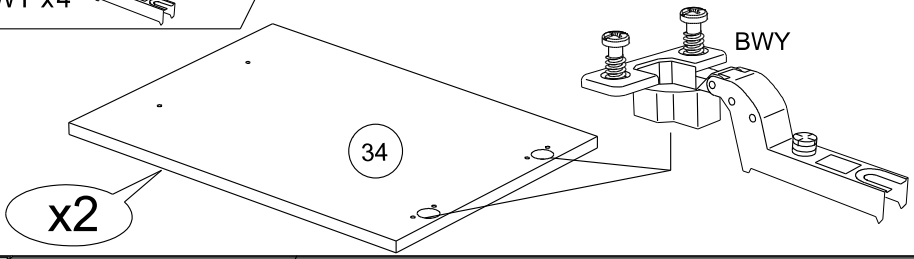

35

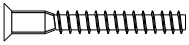

HW x 4

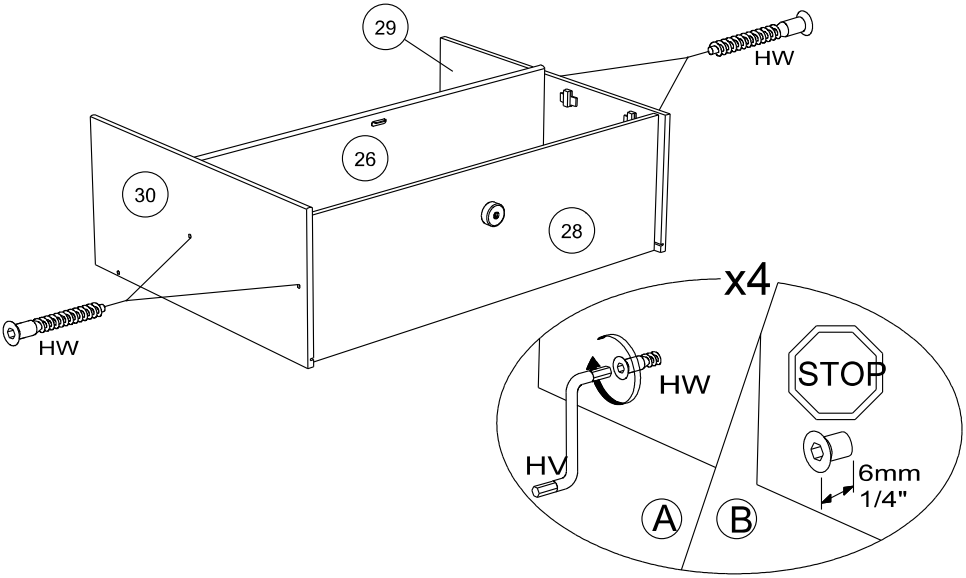

36

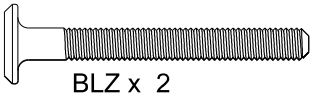

BLZ x 2

WA x 2

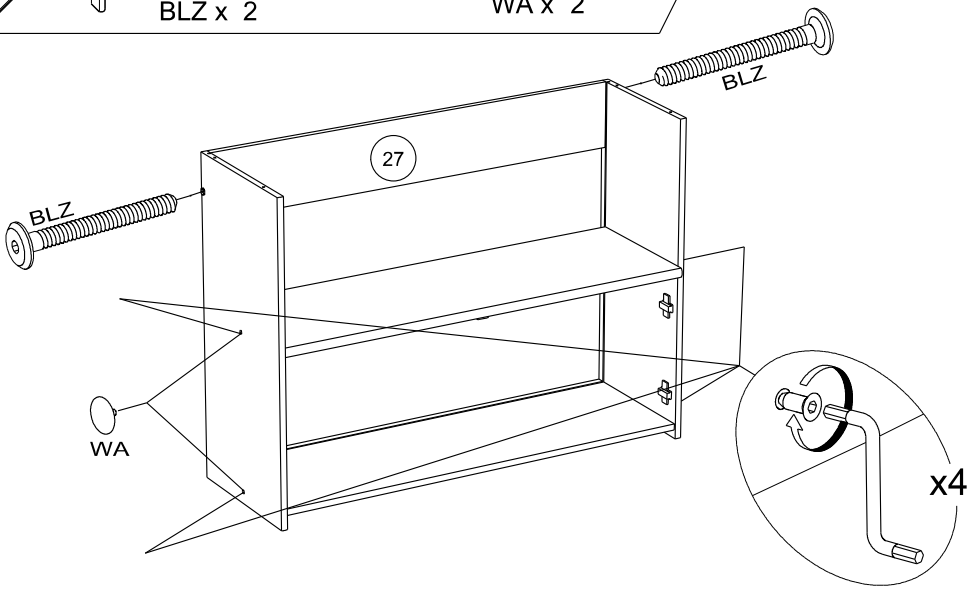

37

EP x 2

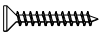

VJ x 4

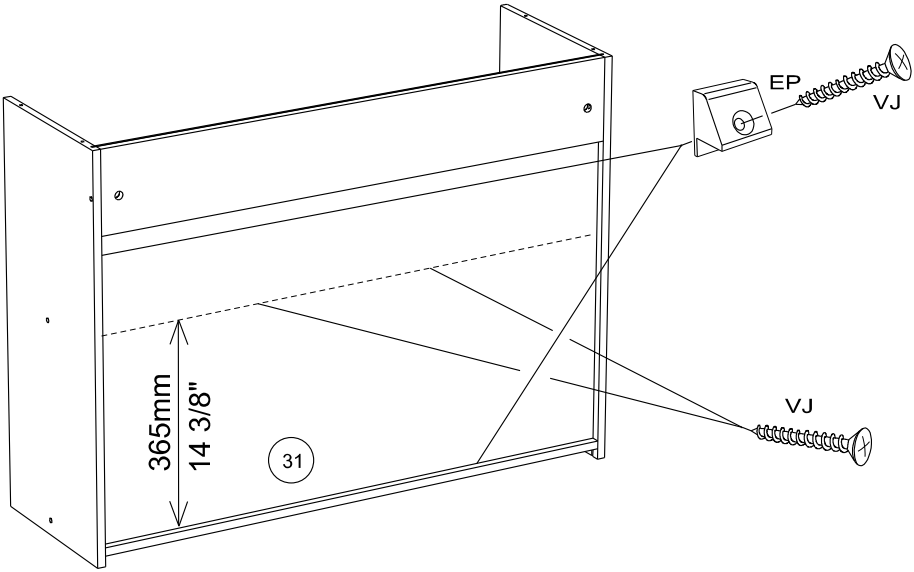

38

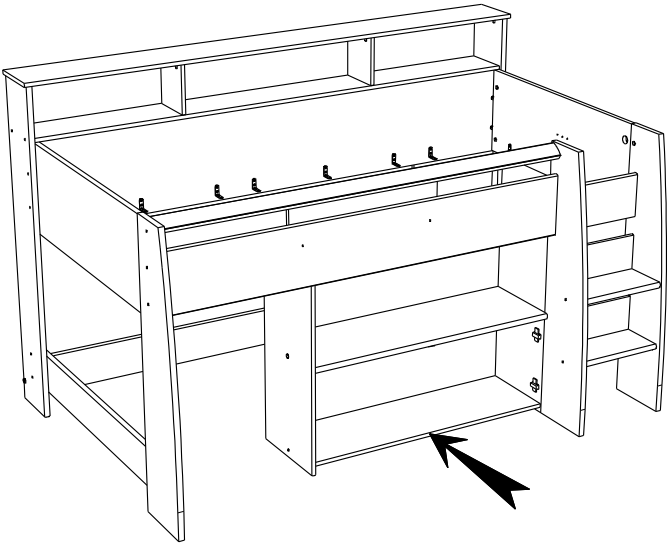

39

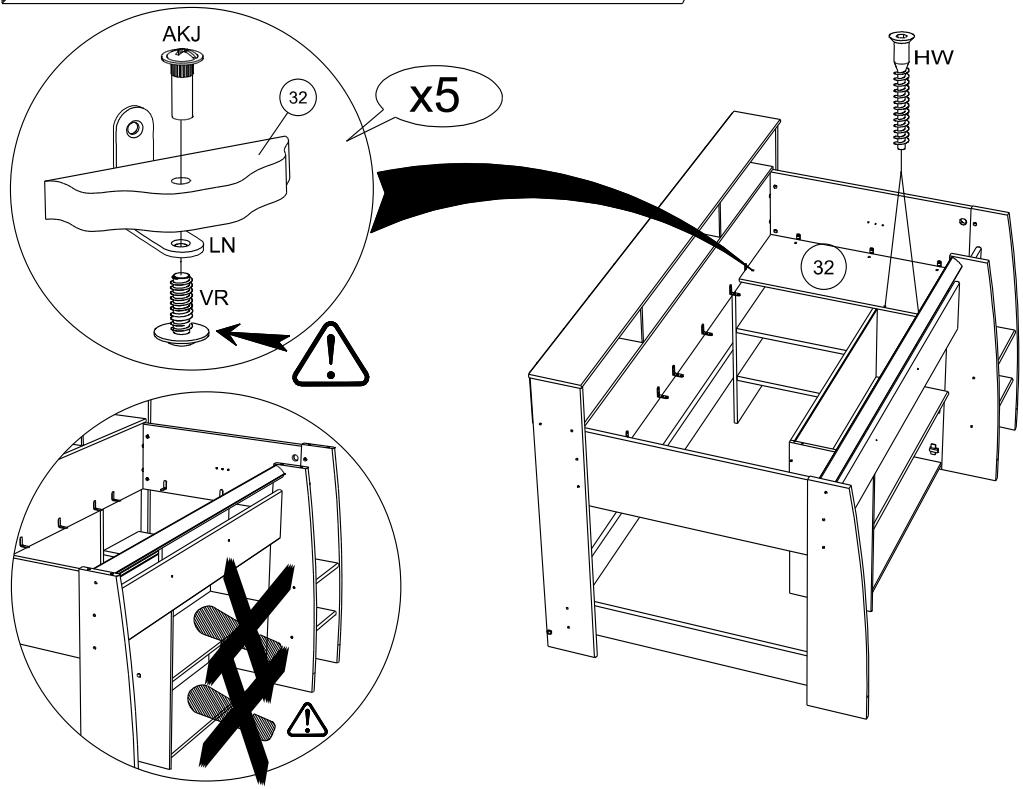

40

AKJ x 9
VR x 9
HW x 2

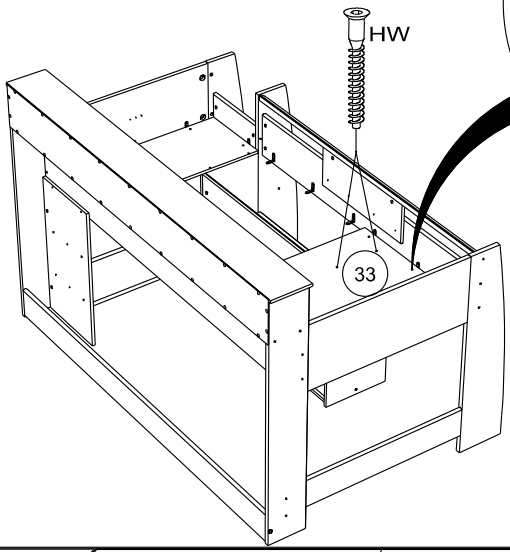
HW
33

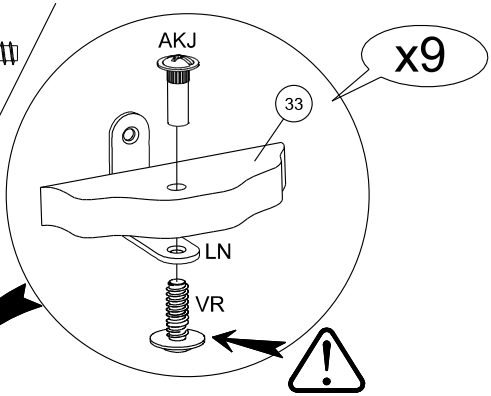
AKJ
x9
33
LN
VR

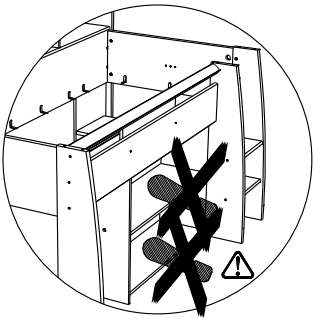

41

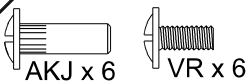
AKJ x 6
VR x 6

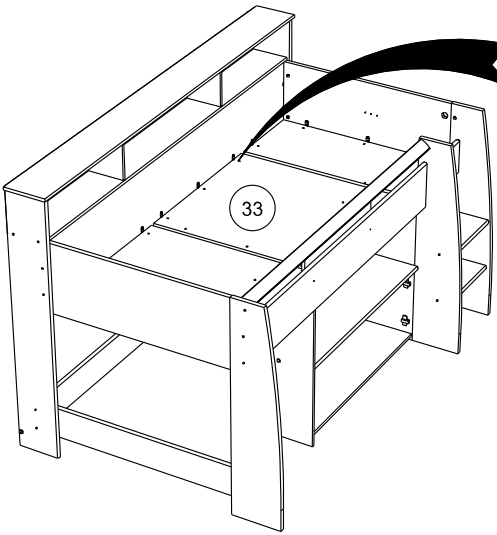
33

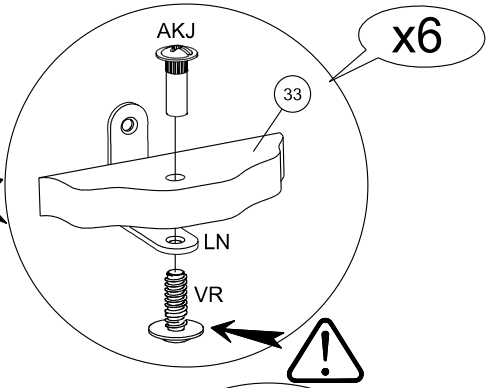
AKJ
x6
33
LN
VR

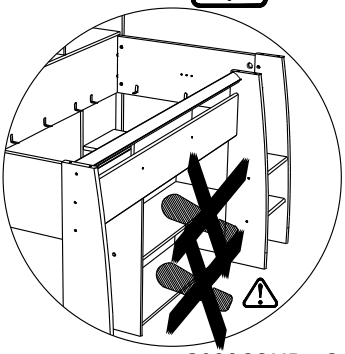

42

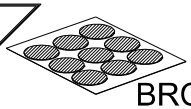

BRC x1

WZ x 4

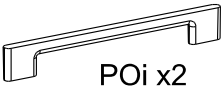

POi x2

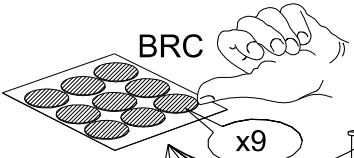

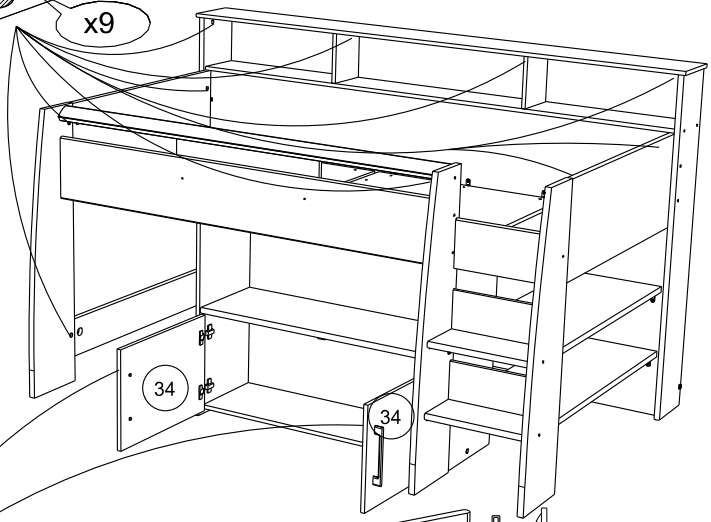

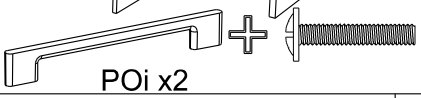

WZ x 4

POi x2

RCH-N

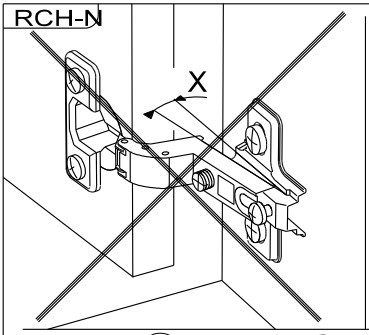

MONTAGE

GB *LEAFLET*
D *AUFBAUANLEITUNG*
E *MONTAJE*
P *MONTAGEM*
I *MONTAGGIO*
NL *MONTAGE*

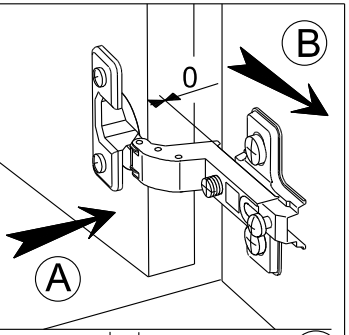

REGLAGE GB *ADJUSTING* E *AJUSTER* I *AGGIUSTAMENTO*
D *ANPASSUNG* P *REGULACAO* NL *AFSTELLING*

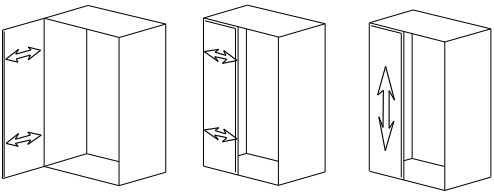

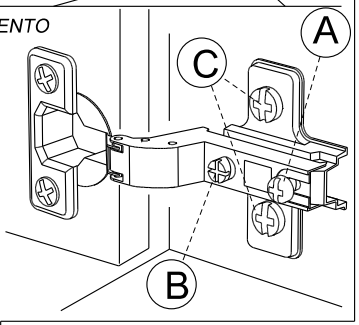

43

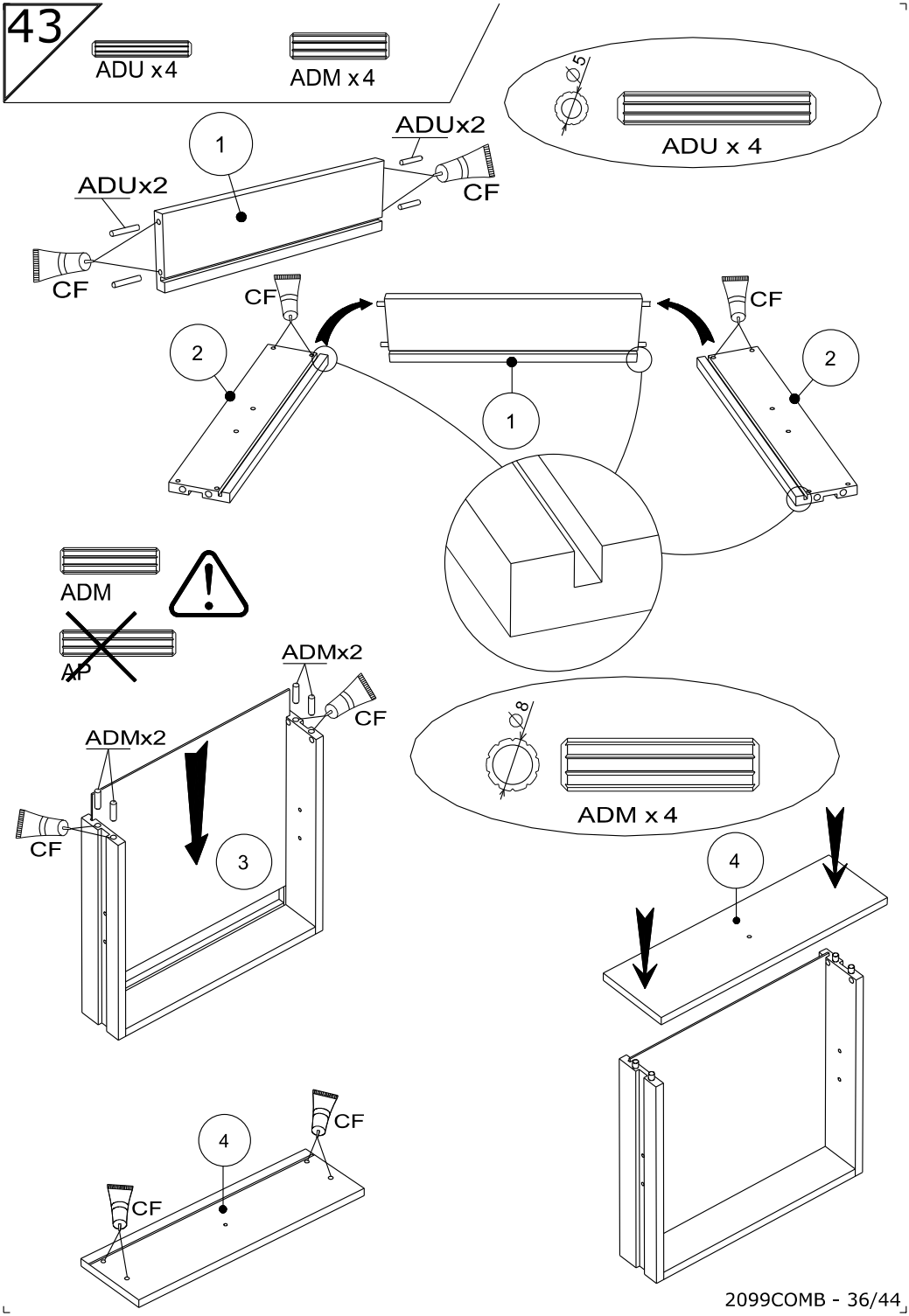
ADU x4
ADM x4
ADU x 4
ADUx2
ADUx2
CF
CF
1
CF
CF
2
2
1
ADM
AP
ADMx2
ADMx2
CF
CF
3
ADM x 4
4
4
CF
CF

44

BSD x 6

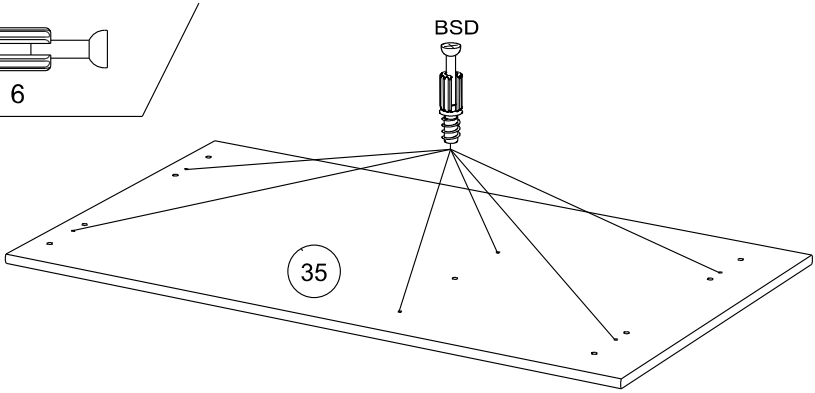

45

ADM x5 Ci x2 ANK x 4 VG x 4

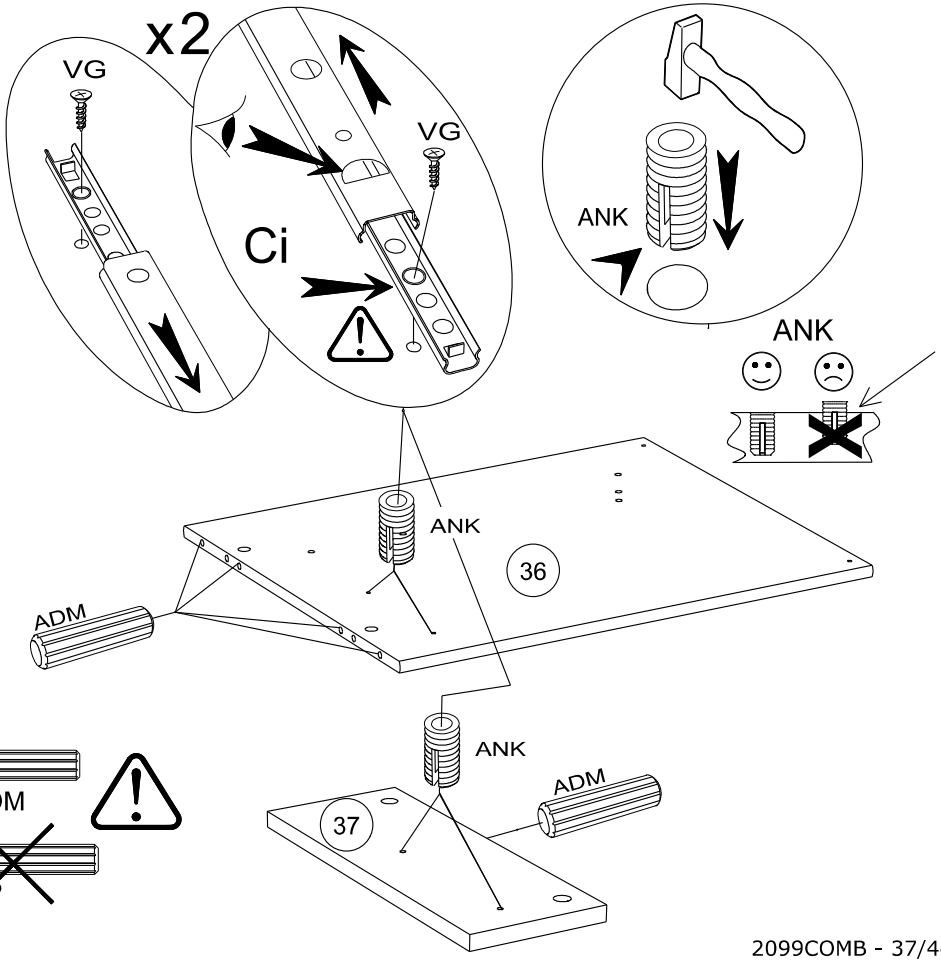

46

AP x 6

AHX x 4

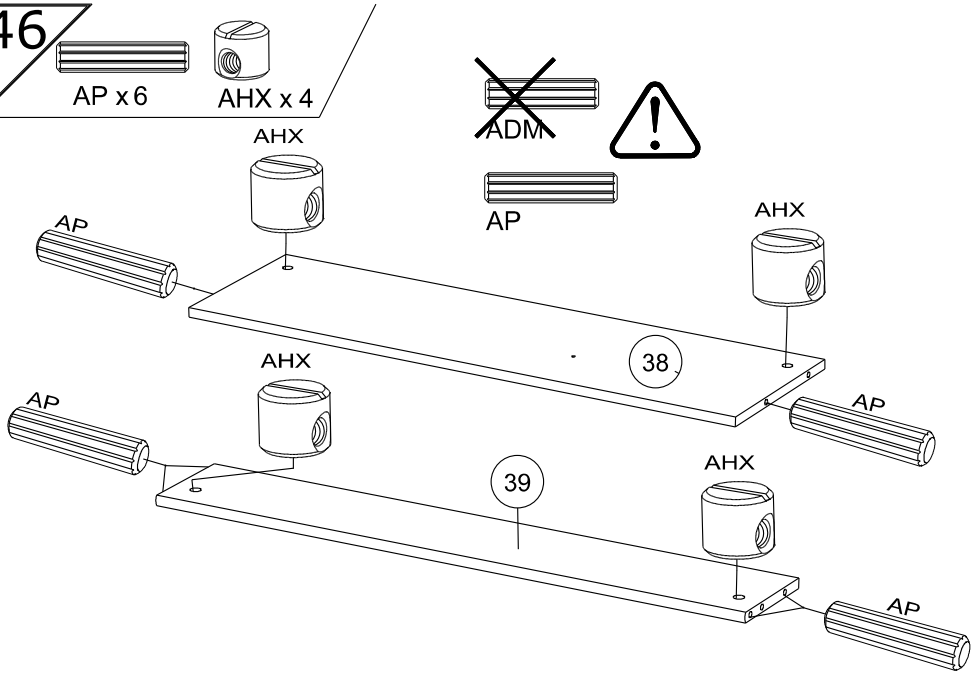

47

ADM x 4

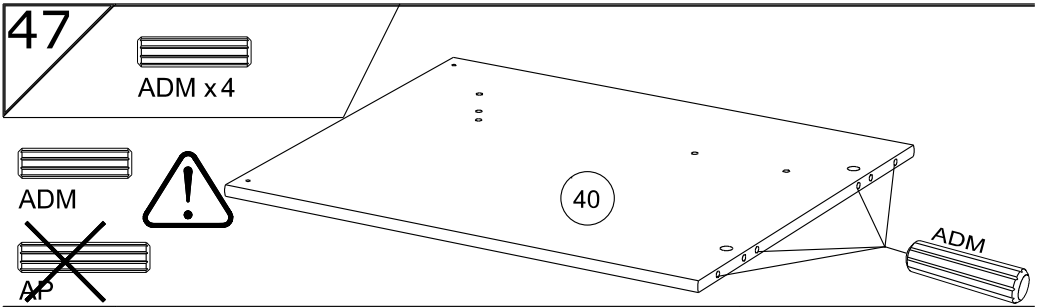

48

BLZ x 4

BML x 4

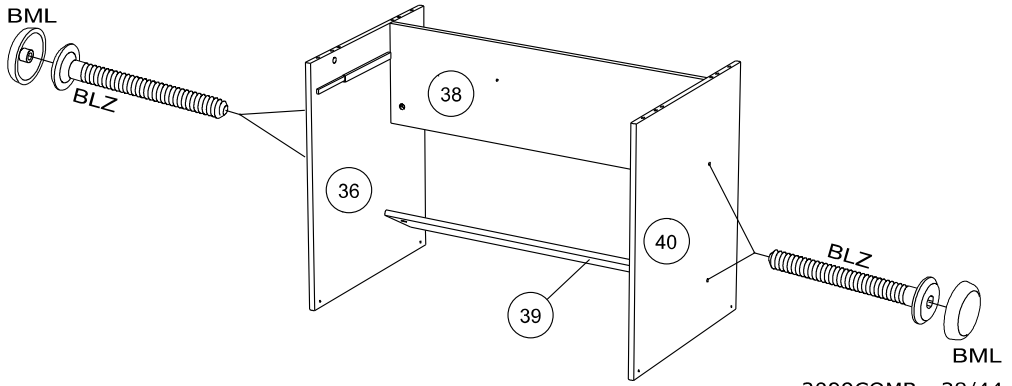

49

Ai x 4

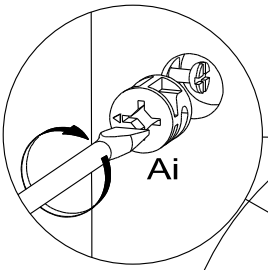

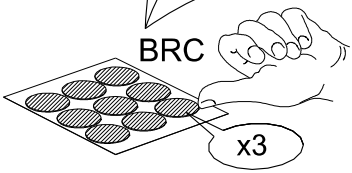

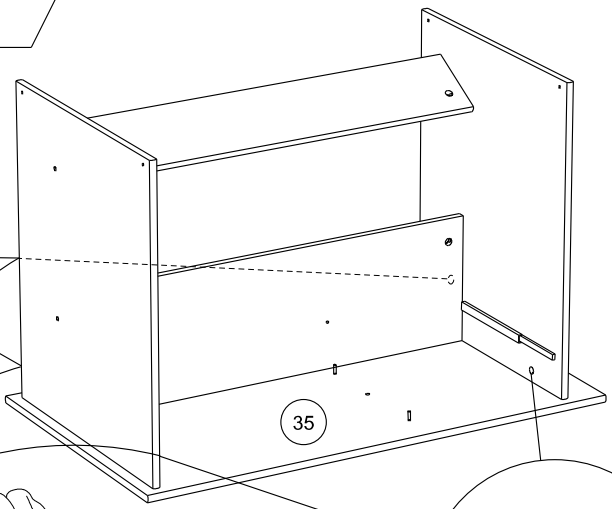

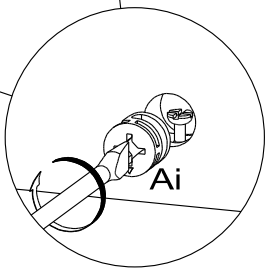

50

Ai x 2

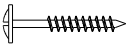

WH x 1

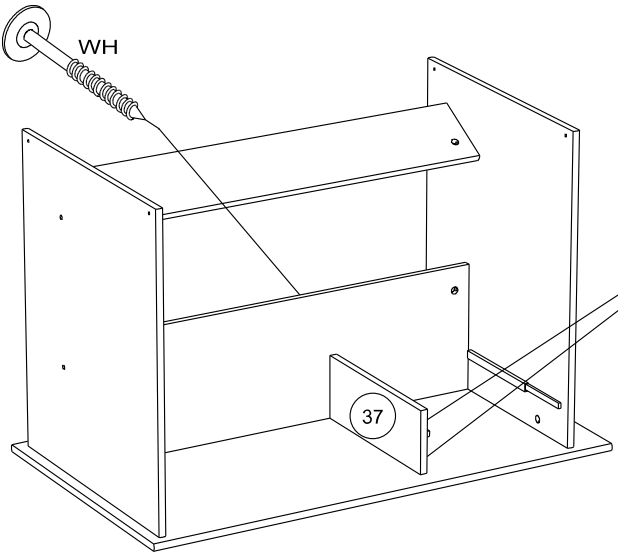

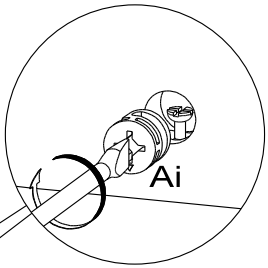

51

SD x 4 AKJ x 4 VR x 4

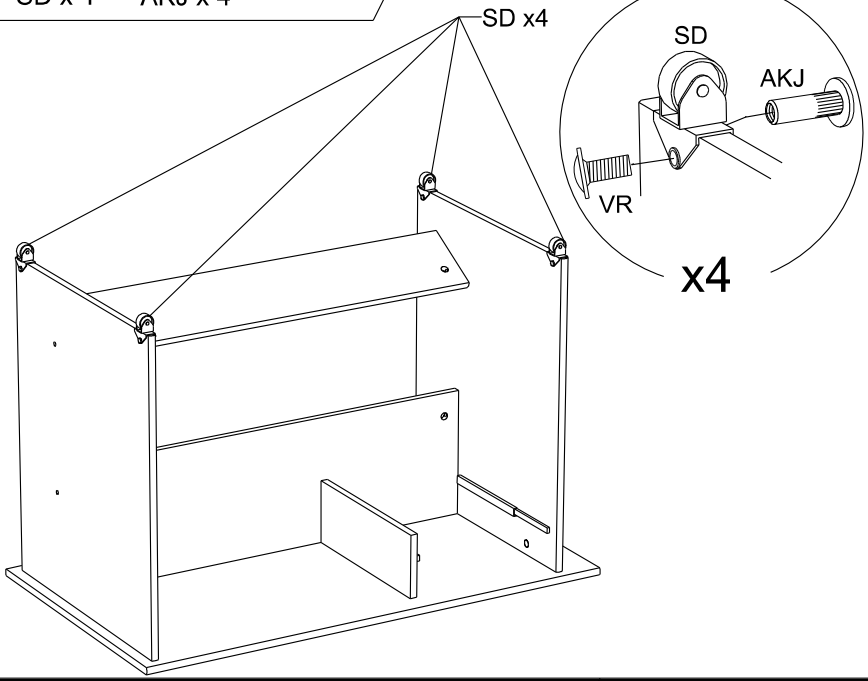

52

VR x 2 WZ x 1 BOU x1

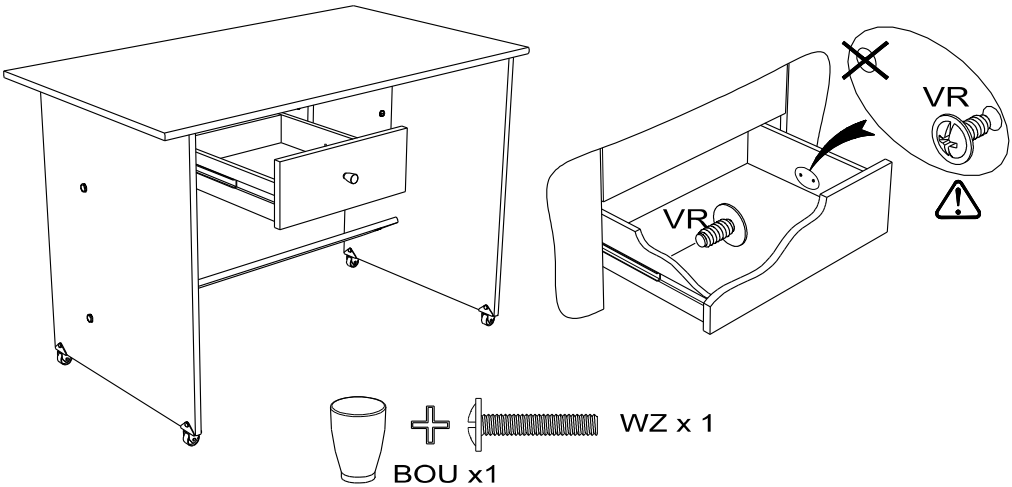

FR LA FACE SUPERIEURE DU MATELAS NE DOIT PAS SE TROUVER AU DESSUS DE LA MARQUE FAITE SUR LE LIT

EN THE TOP SIDE OF THE MATTRESS SHOULD NOT BE HIGHER THAN THE LEVEL INDICATED ON THE BED.

DE DIE OBERSEITE DER MATRATZE DARF NICHT ÜBER DIE AM BETT VORHANDENE MARKIERUNG ÜBERSTEHEN

ES LA PARTE SUPERIOR DEL COLCHÓN NUNCA HA DE ENCONTARSE ENCIMA DE LA MARCA HECHA SOBRE LA CAMA

PT A FACE SUPERIOR DO COLCHÃO NÃO DEVE FICAR EM CIMA DA MARCA FEITA NA CAMA

IT IL LATO SUPERIORE DEL MATERASSO NON DEVE TROVARSI AL DI SOPRA DEL MARCHIO POSTO SUL LETTO

NL DE BOVENZIJDE VAN DE MATRAS MAG NIET BOVEN DE MARKERING OP HET BED UITSTEKEN

CZ HORNÍ STRANA MATRACE NESMÍ VYČNÍVAT NAD ZNAČKU NA POSTELI

HU A MATRAC FELSÖ OLDALA NEM LEHET MAGASABBAN MINT AZ ÁGYON TALÁLHATÓ JELZÉS

PL GÓRNA POWIERZCHNIA MATERACA NIE MOŻE ZNAJDOWAĆ SIĘ POWYŻEJ OZNACZENIA NA ŁÓŻKU

RO FAȚA SUPERIOARĂ A SALTELEI NU TREBUIE SĂ DEPĂȘEASCĂ MARCAJUL DE PE PAT

RU НАРУЖНАЯ ЧАСТЬ МАТРАСА НЕ ДОЛЖНА НАХОДИТЬСЯ ВЫШЕ СПЕЦИАЛЬНОЙ ОТМЕТКИ НА КРОВАТИ

SK VRCHNÁ ČASŤ MATRACA SA NESMIE NACHÁDZAŤ NAD ZNAČNOU VYZNAČENOU NA POSTELI

TR SOMYANIN ÜST YÜZÜ, YATAK ÜZERİNDEKİ İŞARETİN ÜSTÜNDE YER ALMAMALIDIR

الجانب العلوي للمرتبة لا يجب أن يتجاوز العلامة الموجودة على السرير

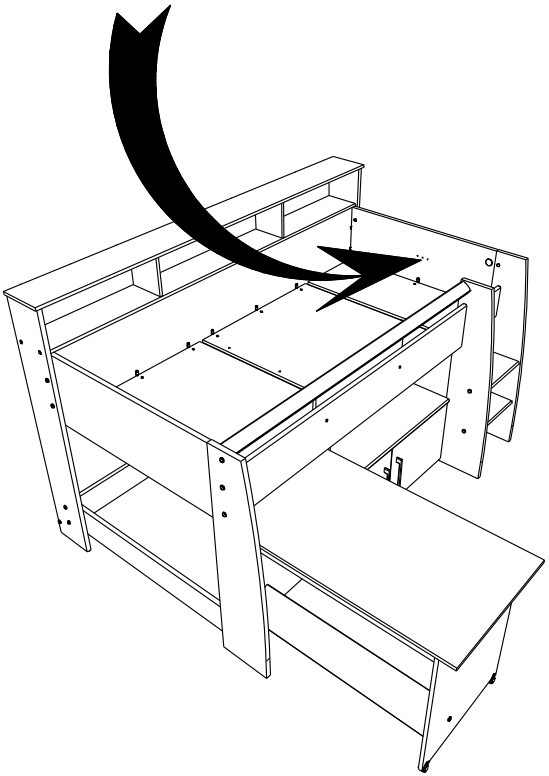

FR Pour votre sécurité : Fixation du meuble au mur
Attention, la fixation doit être réalisée par une personne compétente car cela nécessite des chevilles adaptées à la nature de votre mur.

EN For your safety: the unit should be secured to the wall.
NB this should be carried out by a competent person as you must use the right rawlplug for your type of wall.

DE Zu Ihrer Sicherheit: Befestigen Sie das Hochbett an der Wand.
Achtung: Diese Befestigung ist durch eine fachlich kompetente Person vorzunehmen. Hierfür sind für die Bauweise Ihrer Wand geeignete Dübel einzusetzen.

ES Por su seguridad: Fijar el mueble a la pared.
Advertencia: la fijación la ha de llevar a cabo por personal adecuado, ya que requiere el uso de tacos que se adapten al tipo de pared.

PT Para sua segurança: fixação do móvel ao muro
Atenção: a fixação deverá ser efetuada por pessoa habilitada, visto que são necessárias cavilhas adaptadas ao tipo de parede.

IT Avvertenza di sicurezza: il fissaggio del mobile a parate deve essere realizzato da una persona competente, in quanto l'operazione richiede l'impiego di tasselli adatti alla natura del muro.

NL Voor uw veiligheid: bevestiging van het meubel aan de muur.
Opgelet de bevestiging moet worden uitgevoerd door een bekwaam persoon daar dit voor uw type muur geschikte pluggen vereist.

CZ Z bezpečnostních důvodů: upevněte nábytek do zdi
Pozor, upevnění je třeba svěřit kompetentní osobě, neboť vyžaduje hmoždinky vhodné pro vaši zeď.

HU Az Ön biztonsága érdekében : a bútor falra rögzítése
Figyelmeztetés : a rögzítés csak megfelelö szakképesítéssel rendelkezö személy által végezhetö el, mert a rögzítéshez a falnak megfelelö csavarokra van szükség.

PL Dla bezpieczeństwa: mocowanie mebla do ściany
Uwaga, mocowanie musi zostać wykonane przez osobę kompetentną, ponieważ wymaga to zastosowania kołków dostosowanych do rodzaju ściany.

RO Pentru securitatea dumneavoastră: fixarea mobilierului de perete
Atenție, fixarea trebuie să fie realizată de o persoană calificată, deoarece sunt necesare dispozitive de fixare adaptate caracteristicilor peretelui dumneavoastră

RU Для вашей безопасности: Крепление мебели к стене
Внимание! Крепление должно производиться опытным специалистом, т.к. для такой установки потребуются штифты, соответствующие типу вашей стены.

SK Z bezpečnostných dôvodov: nábytok upevnite k stene.
Dbajte na to, aby upevnenie vykonala kompetentná osoba, pretože pri upevňovaní sa vyžadujú kolíky vhodné do materiálu, z ktorého je stena vyrobená.

TR Güvenliğiniz için: Mobilyanın duvara sabitlenmesi
Dikkat, sabitleme işlemi uzman biri tarafından yapılmalıdır çünkü bu işlem için duvarınızın malzemesine uygun dübellerin kullanılması gerekmektedir

GR Για την ασφάλειά σας : στερέωση των επίπλων στον τοίχο.
Προσοχή, η στερέωση πρέπει να γίνεται από ικανό άτομο, καθώς απαιτούνται σφήνες προσαρμοσμένες στη φύση του τοίχου σας.

اللغة العربية

لسلامتك الشخصية: تثبيت قطعة الأثاث على الحائط
تحذير، يجب أن يقوم شخص متخصص بعملية التثبيت على الحائط إذ أنها تتطلب اسفينا معينا يتوافق مع طبيعة الحائط نفسه.

55

BLL x2

VG x 2

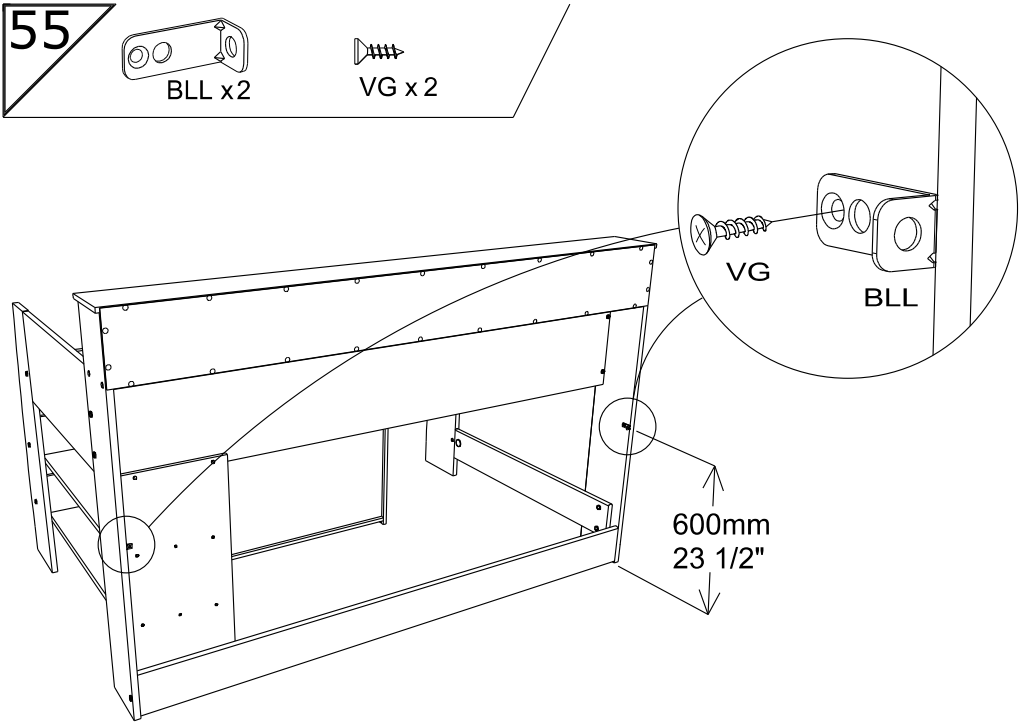

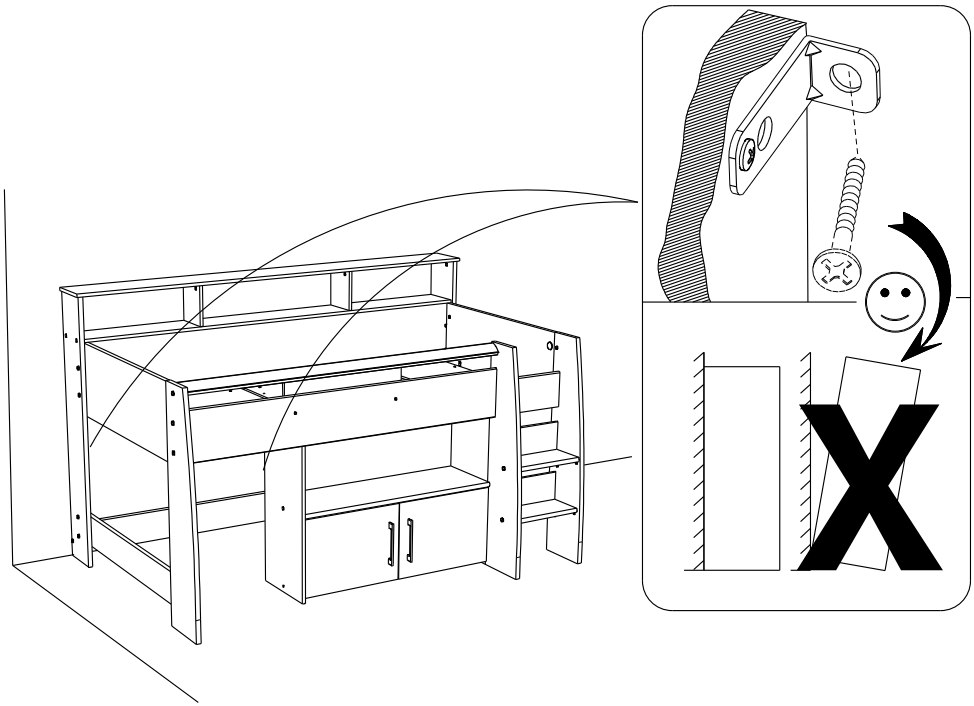

Please dispose of all packaging safely.

General Care & Maintenance

Wipe clean with a slightly damp cloth.
Avoid the use of all household cleaners and abrasives.

Periodically check all screw & fixings to ensure they are secure.
When moving your product, carefully lift into place. Never drag or push the product across the floor as this will cause damage to the joints. If the product is used on hard flooring, such as wood or laminated floor, you must place some protection under the legs to stop the product from moving. If this is not adhered to, it could result in failure to the product that will invalidate the warranty.

For more information on cleaning and product care visit:
https://www.happybeds.co.uk/help-and-advice

Notes

We've tried to make this product as easy to assemble as possible. In the unlikely event that you have problems putting it together or have damaged or missing pieces, please contact us by visiting:
https://www.happybeds.co.uk/customer-service

www.happybeds.co.uk

happybeds®