happybeds

Assembly Instructions

Phoenix - Double/King

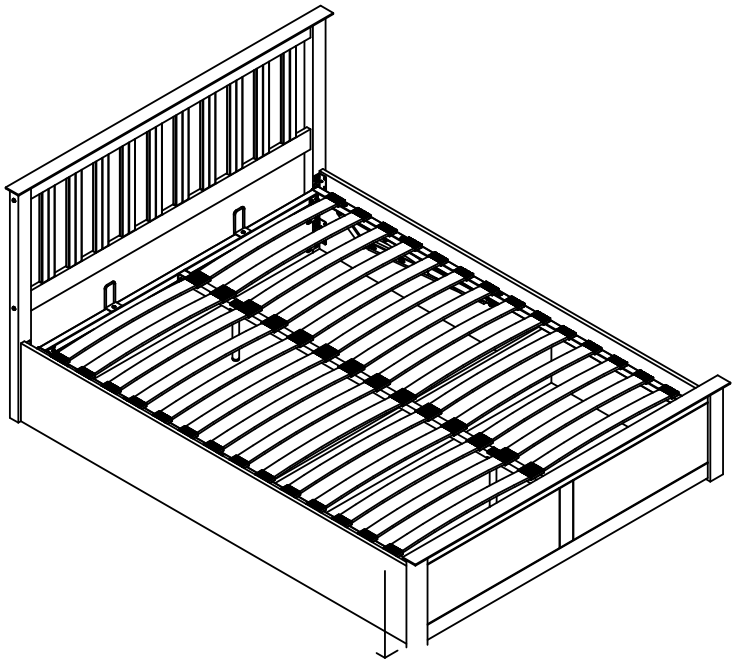

Important before assembly:

Read these instructions carefully before assembling or using the product.

Please check the contents of the boxes before attempting to assemble this product. The instructions will have a checklist of parts and fittings.

It would be sensible to lay a rug or a carpet on the floor where you intend to assemble the product, to avoid scratches and damaging the product or the floor.

Assemble the product as close to its intended final location/room as possible.

Do NOT use any power tools as this may damage the frame.

Health & Safety:

This product or some parts of this product will be heavy. Please use an assistant when lifting.

Please keep small parts out of reach of children.
Always use on a level, even surface.
DO NOT jump on the product or any of its parts.
DO NOT use this product if any parts are missing, damaged or worn.
DO NOT use this product unless all fixings are secured.

Please keep these instructions for future reference.

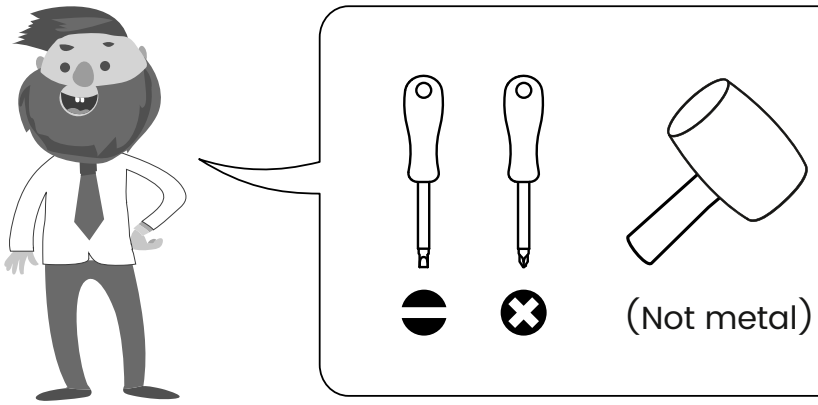

These tools are not necessary, but may help to assemble certain parts of the product.

Do NOT use any power tools as this may damage the frame.

This product or some parts of this product will be heavy. Please use an assistant when lifting.

Never drag or push the pieces across a hard or stone floor as this will cause damage to the joints. Use a carpet or a rug for extra care.

If you have problems assembling or have damaged or missing pieces, please contact us by visiting:
https://www.happybeds.co.uk/customer-service

Parts List			
Parts	Description	Qty	Box
1	Top Bar	2	2/4
2	Headboard Frame	1	1/4
3	Left Wooden Post	1	2/4
4	Right Wooden Post	1	
5	Footboard	1	1/4
6	Left Side Rail	1	4/4
7	Right Side Rail	1	
8	Centre Storage Panel	1	
9	Back Storage Panel	1	
10	Hydraulic Arm Spacer	2	
11	Left Side Metal Bar	1	3/4
12	Right Side Metal Bar	1	
13	Headboard End Metal Bar	1	
14	Footboard End Metal Bar	1	
15	Center Metal Bar	1	
16	Support Leg	2	
17	Slat	28	
18	Left Hydraulic Base Support c/w Pump Stopper	1	
19	Right Hydraulic Base Support	1	
20	Hydraulic Base Pump	2	

Hardware List (Found in box #)			
Parts	Description	Qty	Box
A	Mini Fix	14	3/4
B	8 x 30 mm Wooden Dowel	12	
C	Metal Corner Block	2	
D	M6 x 90 mm Barrel Nut	4	
E	M6 x 15 mm JCBC Bolt	8	
F	M8 x 25 mm JCBC Bolt	16	
G	M8 x 15 mm JCBC Bolt	8	
H	M8 x 35 mm JCBC Bolt	10	
I	Bracket 20 mm x 58 mm	4	
J	Base Handle	2	
K	M6 x 40 mm JCBC Bolt Black	12	
L	M8 x 45 mm JCBB Bolt with Nut Bracket, Spring & Flat Washer	6	
M	Single Slat Cap	28	4/4
N	Double Slat Cap	14	
O	Wooden Button	4	3/4
P	Belt Handle	1	
Q	Washer Bracket	4	
R	Flat Washer	8	
S	Self adhesive 4mm X 35mm	2	
T	M6 Allen Key	1	
U	M8 Allen Key	1	
V	M12.8 Spanner	1	

** You will also need a screwdriver and small mallet (not provided).

Step 1: Attach the headboard frame (2) and back storage panel (9) to the left wooden post (3) and right wooden post (4). Secure the headboard frame using hardware parts **B**, **D** and **O**, then secure the back storage panel with hardware parts **B**,**E** and **I**.

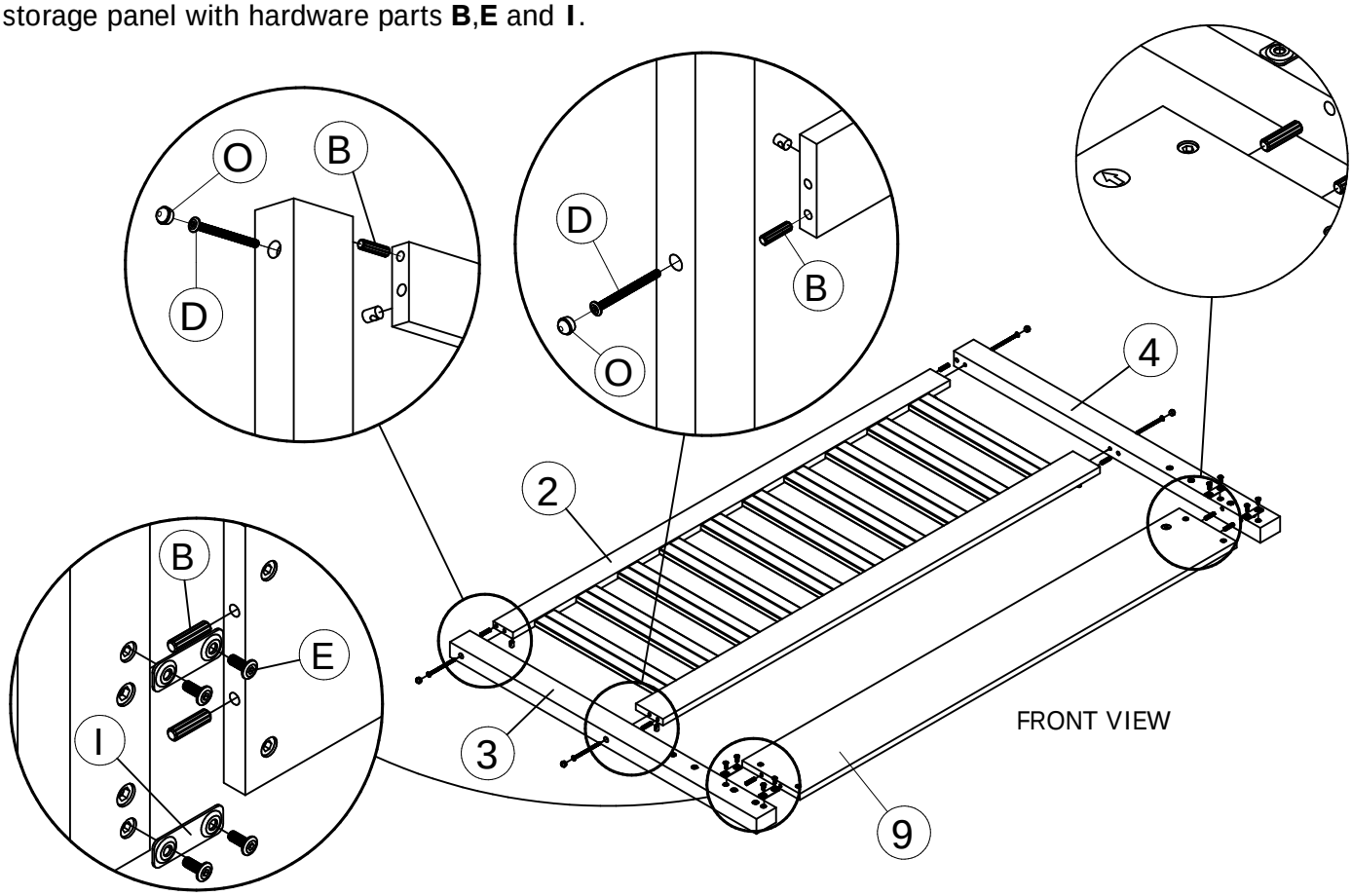

Step 2: Firstly screw the minifit part **A** to the top bar (1) as shown and than fix the top bar (1) to the headboard frame (2) and L/R wooden post (3)(4) using hardware parts **A**.

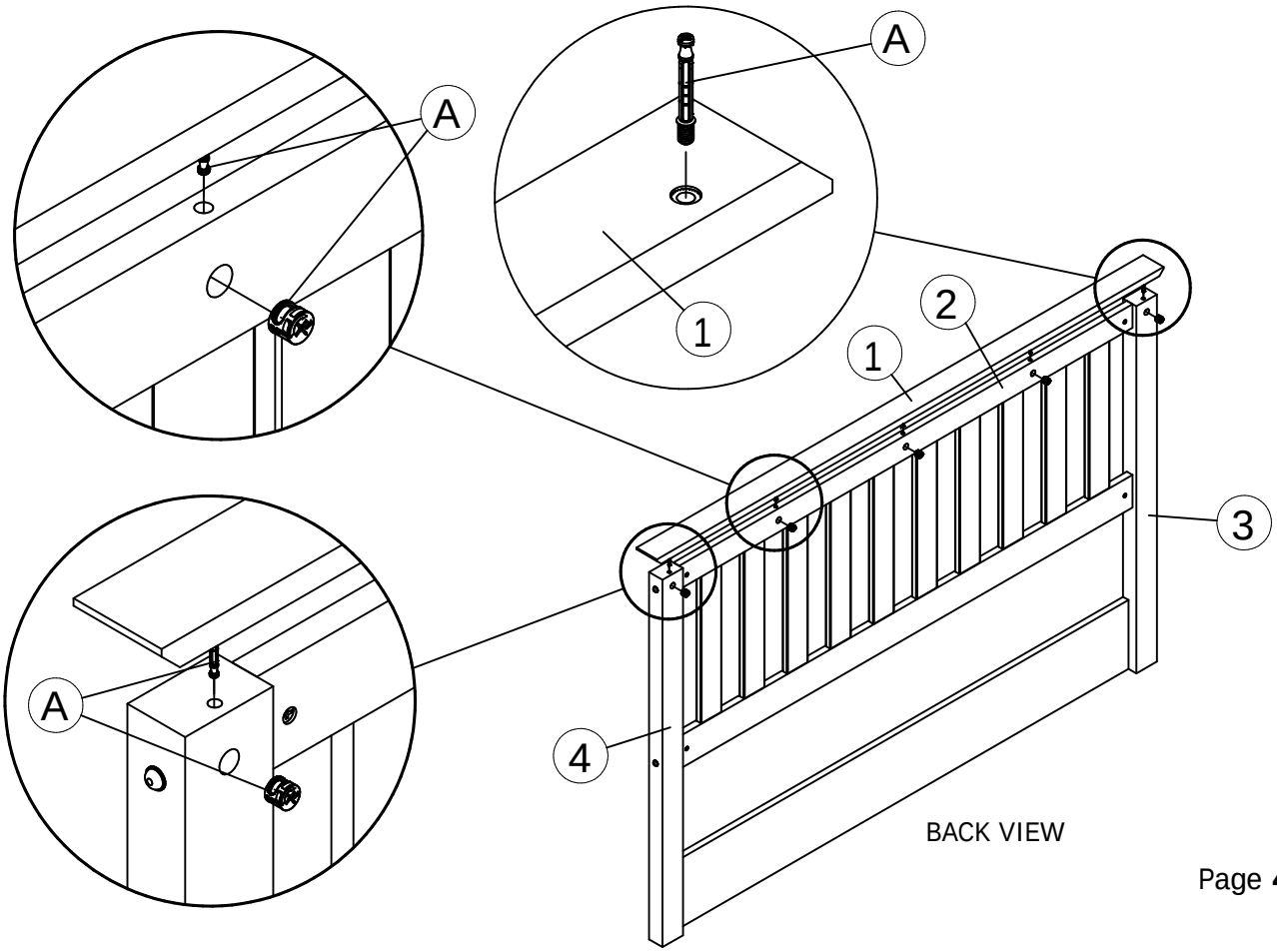

Step 3: Firstly screw the minifit part **A** to the top bar (1) as shown and than fix the top bar (1) to the footboard frame (5) using hardware parts **A**.

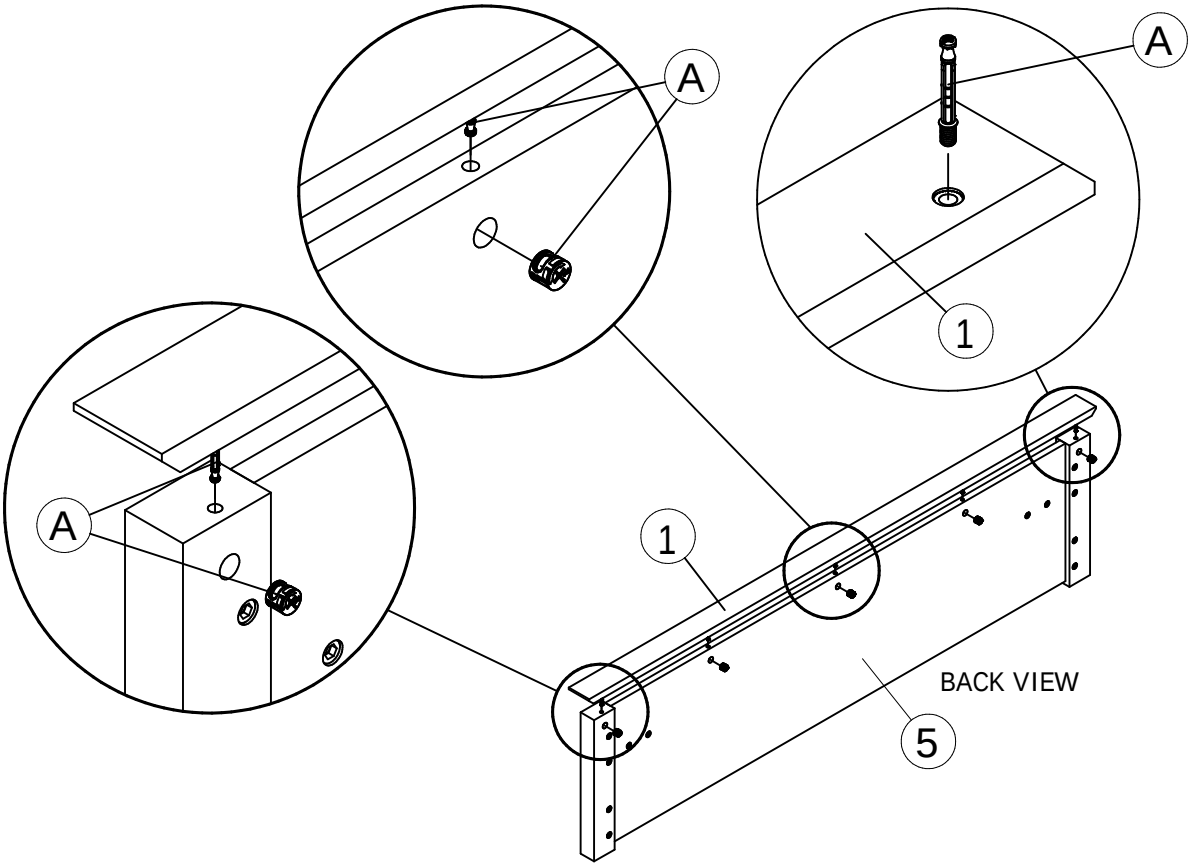

Step 4: Firstly, fix the hydraulic pump to each hydraulic base as shown in diagram 4.1. Next, fix the left & right hydraulic spacer together with hydraulic base supporter to the both side rails using bolts **H** and than screw the minifit part **A** to the both side rails as shown in diagram 4.2.

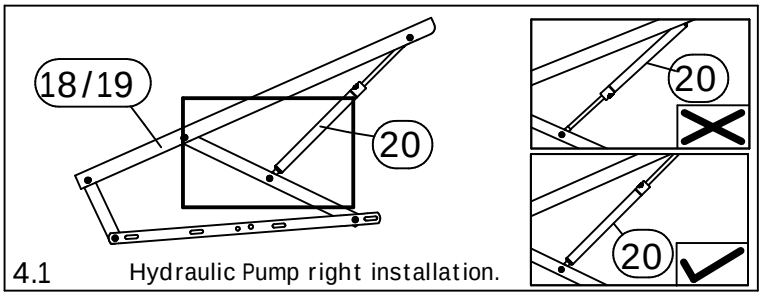

4.1 Hydraulic Pump right installation.

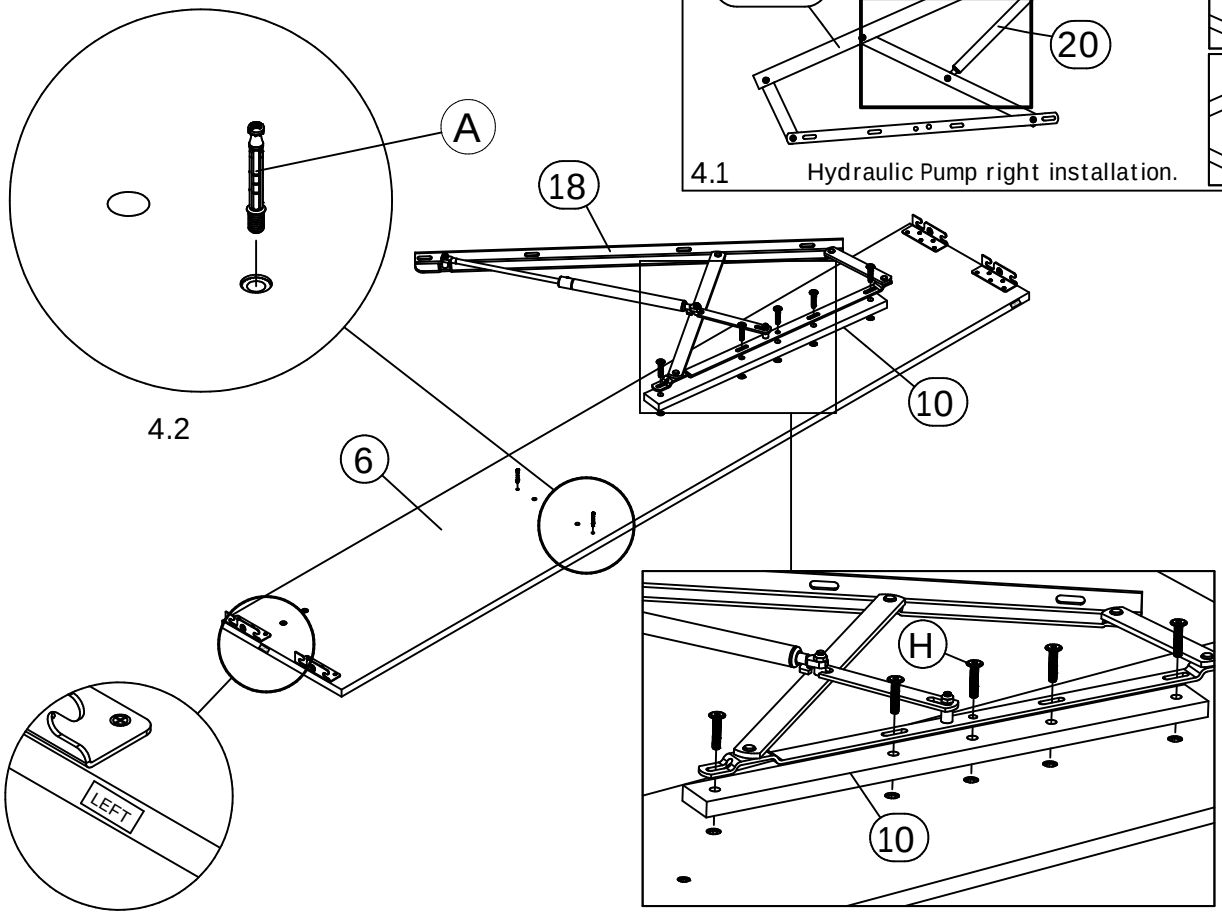

4.2

Step 5: Join together the left side rail (6) and right side rail (7) with the centre storage panels (8) using hardware parts **A** and **B**.

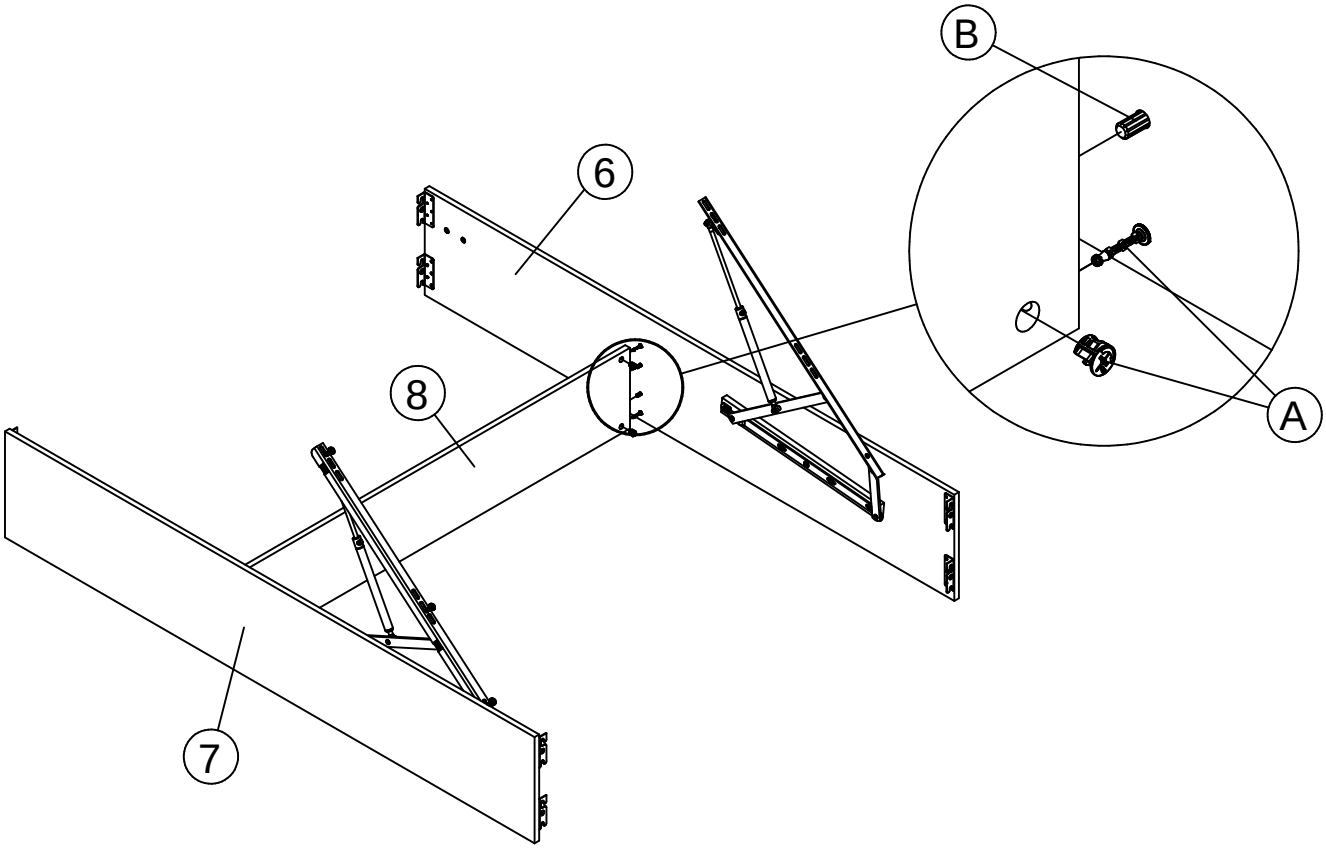

Step 6: Fix side rail to the headboard and footboard with hardware as shown.

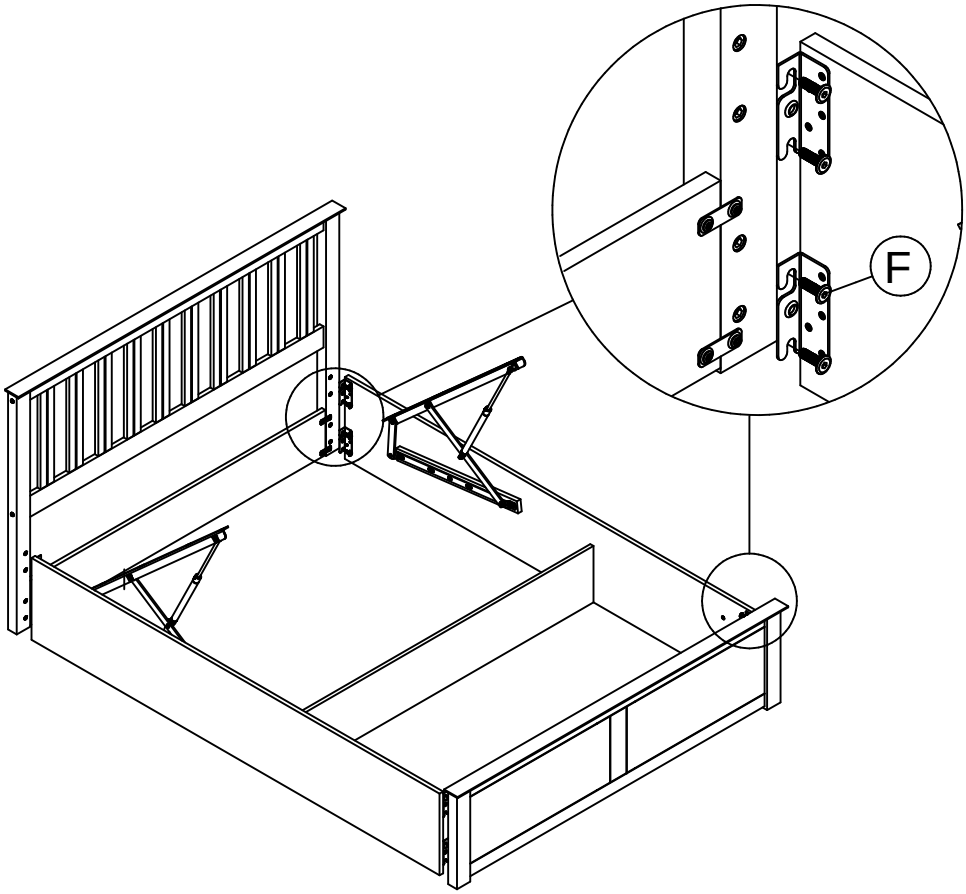

Step 7: Fix metal corner block **C** to the edge of footboard and side rails with bolt **G** as shown.

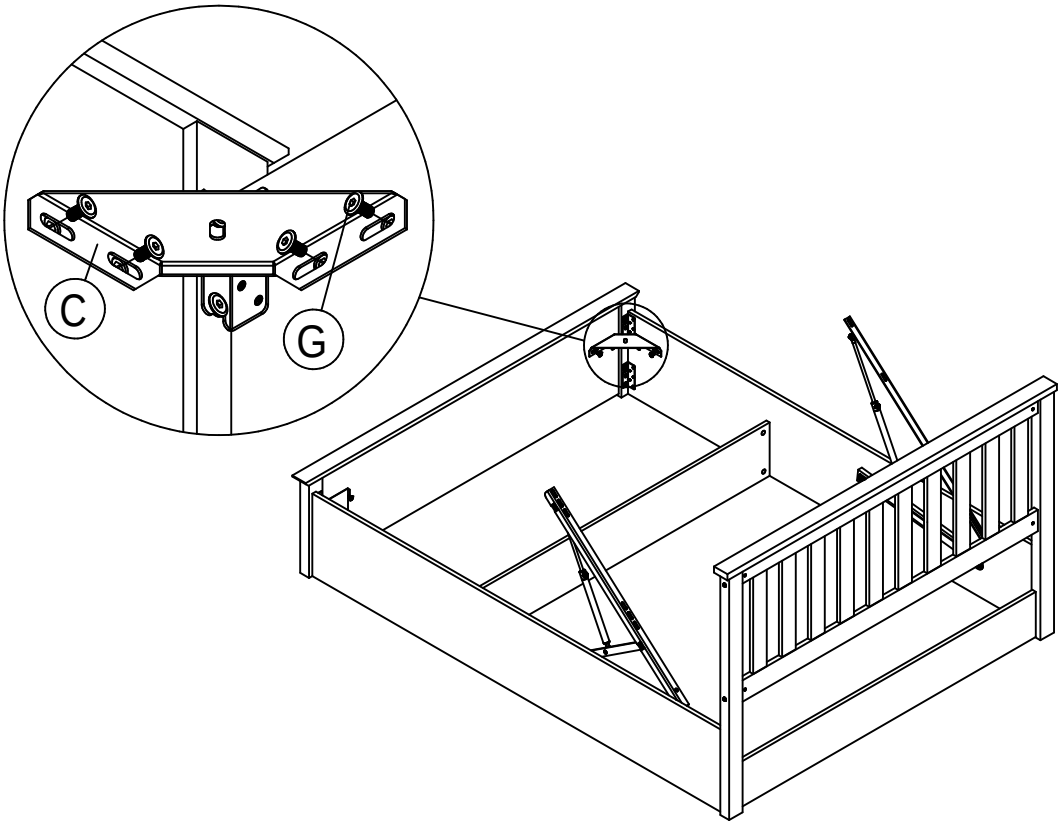

Step 8: Join together all the bed base parts (11),(12),(13),(14) and (15) using hardware parts **K,Q,R** and also attach hardware part **P** by slot to the part (14). And than attach hardware parts **J** using hardware part **K** as shown.**Important note: Please assemble follow arrow direction.**

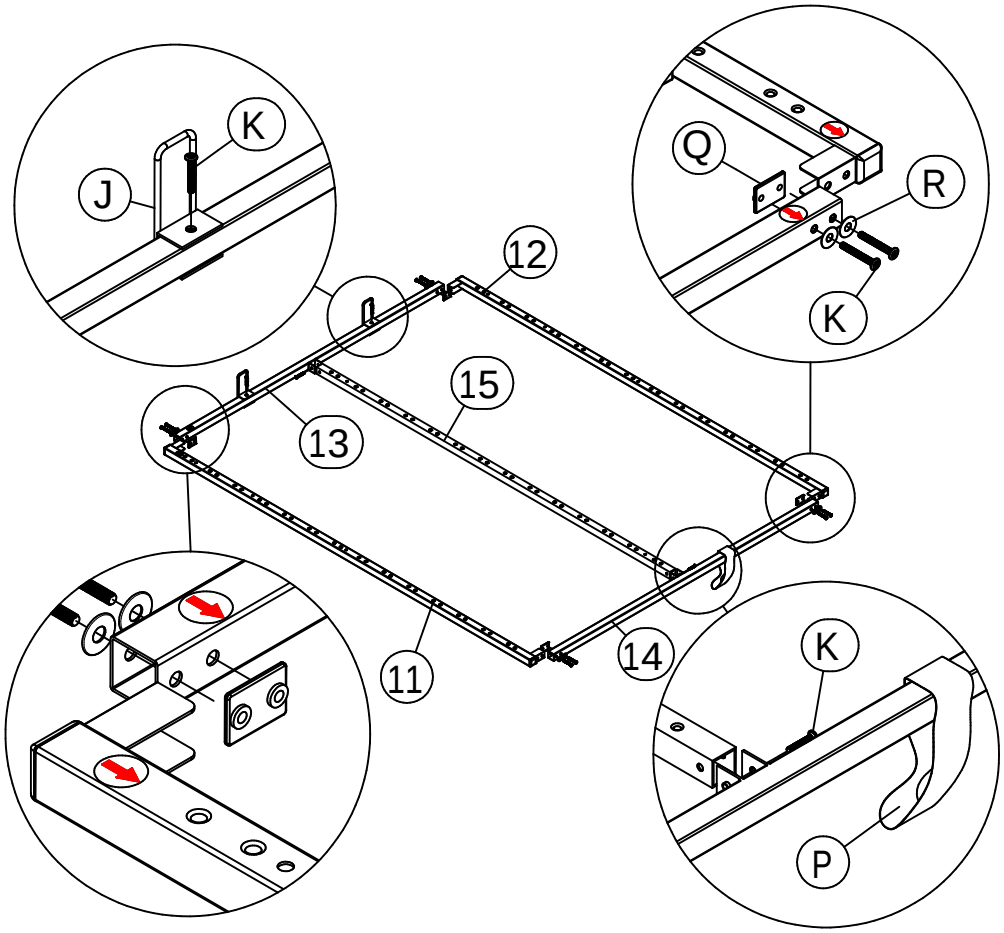

Step 9: Insert the slats (17) to hardware parts **M** and **N** then press into the base making sure they are secure.

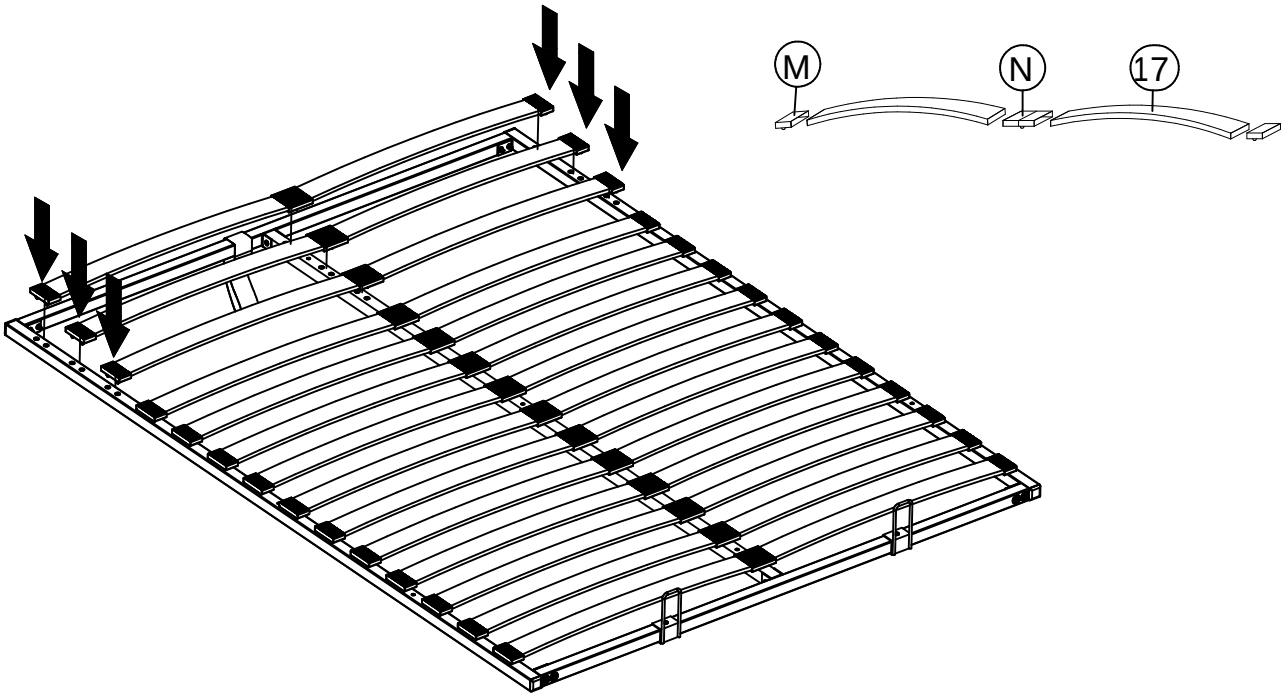

Step 10: Assemble the bed base on the right & left hydraulic frame and fix bolts **L** starting from ' 1 ' to ' 3 ' as shown and fix the support leg (16) to the bed base as shown and than stick it the self adhesive **S** as shown. Important note : **Do not tighten the bolts yet!, and this assemble must be done by two persons.**

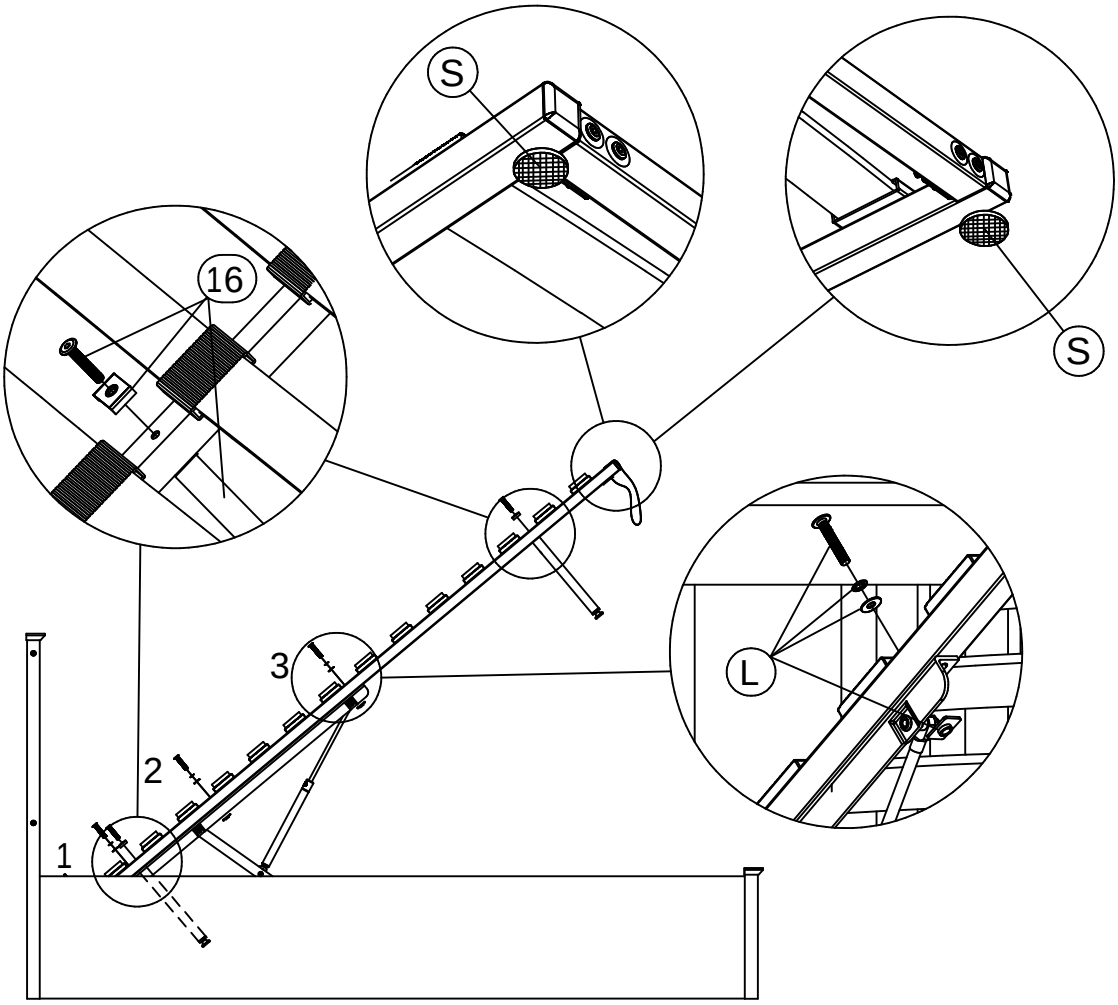

Step 11: Adjust the bed base making sure that the distance to the footboard is approximately 15 mm to above. Tighten all bolts and screws now.

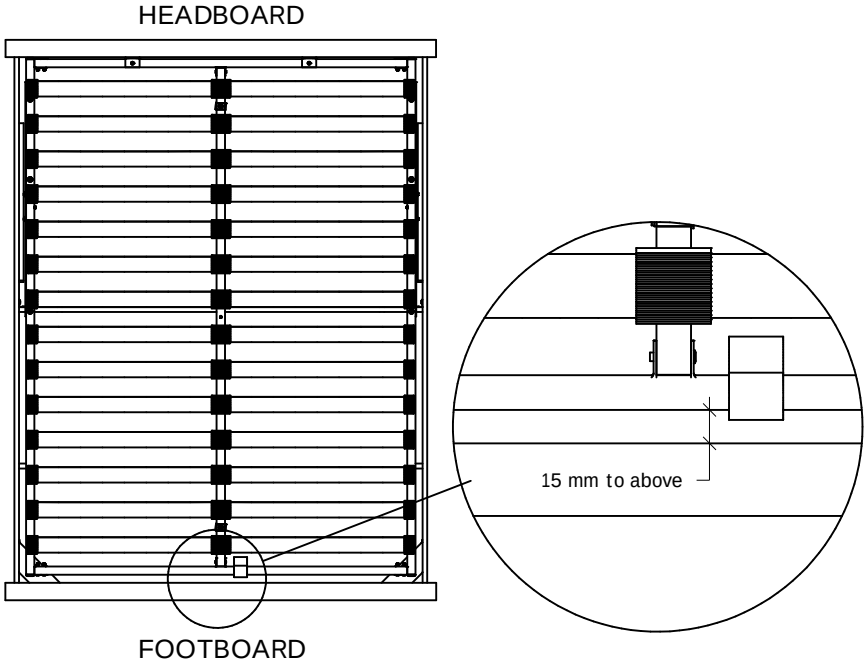

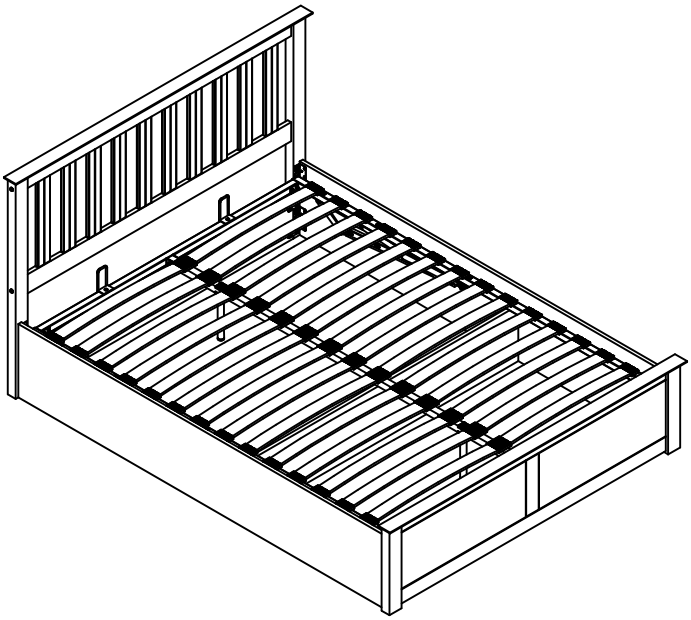

CAUTION :

PLEASE USE HYDRAULIC PUMP STOPPER FOR SAFETY PURPOSE.

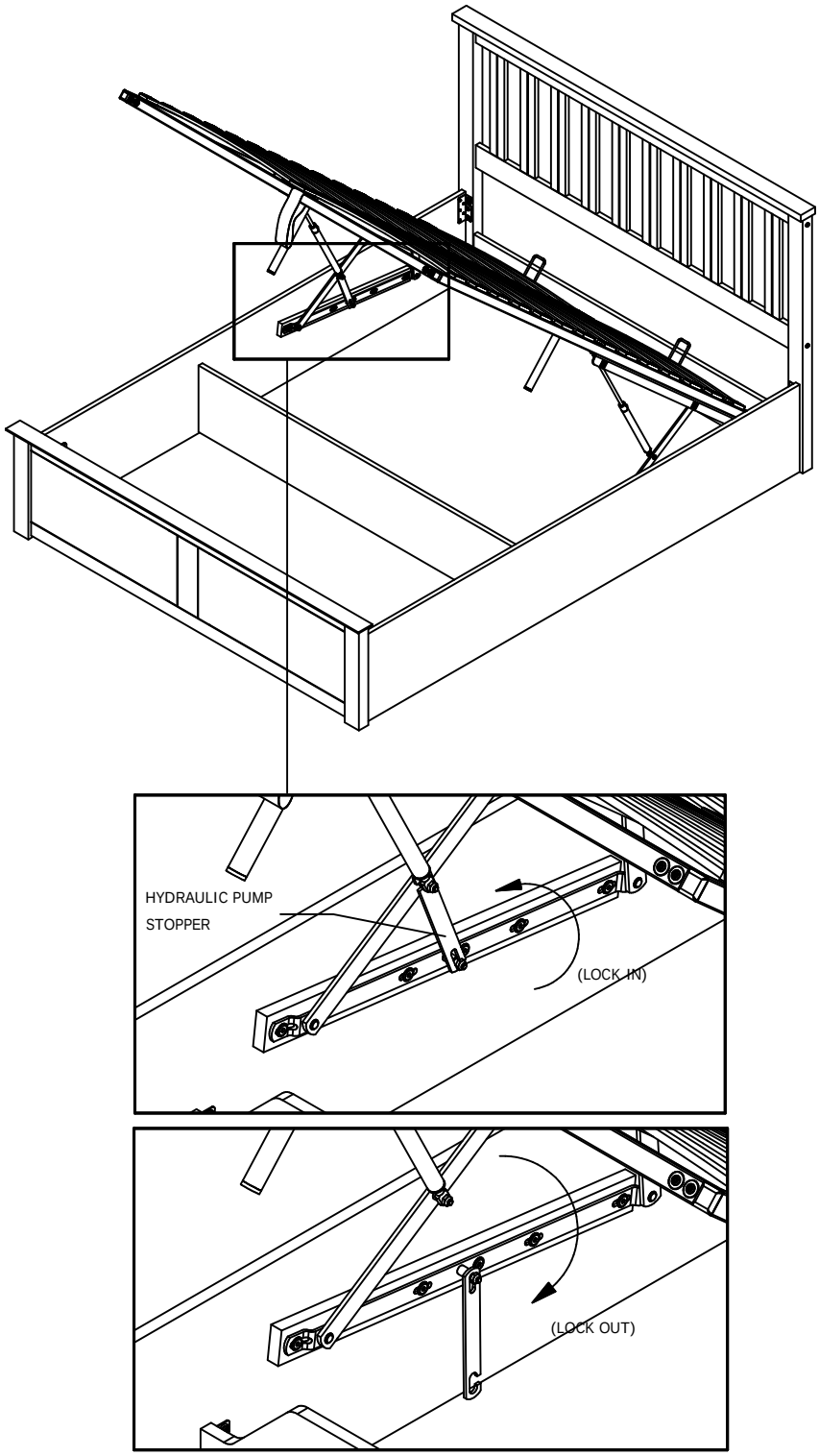

Please dispose of all packaging safely.

General Care & Maintenance

Wipe clean with a slightly damp cloth.
Avoid the use of all household cleaners and abrasives.

Periodically check all screw & fixings to ensure they are secure.
When moving your product, carefully lift into place. Never drag or push the product across the floor as this will cause damage to the joints. If the product is used on hard flooring, such as wood or laminated floor, you must place some protection under the legs to stop the product from moving. If this is not adhered to, it could result in failure to the product that will invalidate the warranty.

For more information on cleaning and product care visit:
https://www.happybeds.co.uk/help-and-advice

Notes

We've tried to make this product as easy to assemble as possible. In the unlikely event that you have problems putting it together or have damaged or missing pieces, please contact us by visiting:
https://www.happybeds.co.uk/customer-service

www.happybeds.co.uk

happybeds®